Ivie Technologies

Ivie 1026 Integrated Mixer

Schematic Package

October 2002

Ivie Technologies Inc.

NOTICE

We have added this information to the Ivie Service website in an effort to help you support your product. This package is the best copy we could find; it may be incomplete or contain dated information.

Ivie did not and does not provide field service guides for it's AudioNet products.

All factory service was accomplished in close collaboration with the design engineers responsible for the product development. Thus this information was intended to be a reference guide for the service technicians – not a service tutorial. It does not contain Theory of Operation or Signal Flow Diagrams.

As of 2013, Ivie Service continues to provide factory service for this product.

We do not provide consulting or support for user service.

Any use of this information is at your sole and complete risk.

Ivie Technologies

005-1970 Rev D
1026 Input Board
Schematic, BOM, and Loading Diagrams

06/14/2004

Ivie
Technologies Inc.

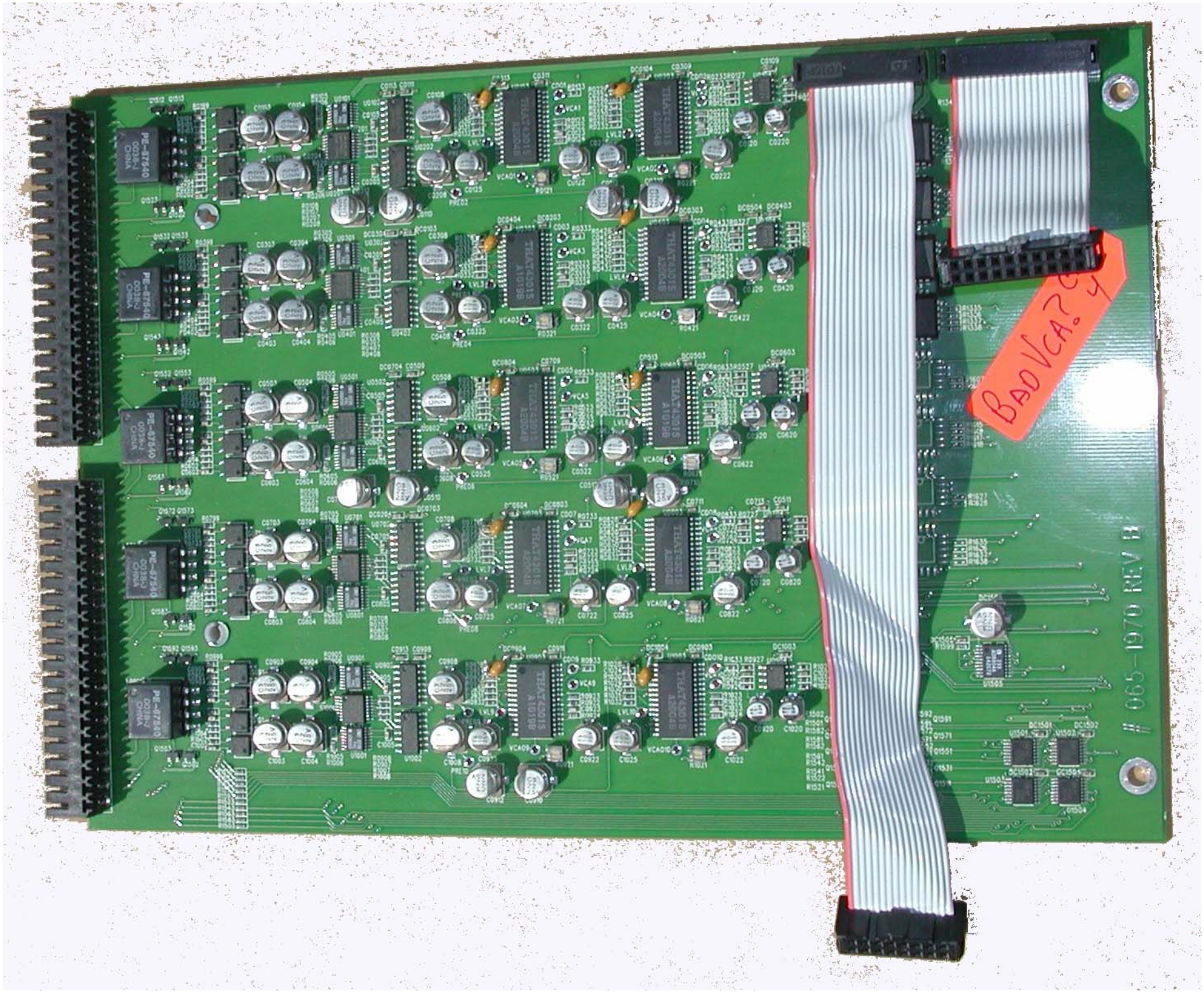
BAD VCA?
065-1970 REV B

Ivie Technologies

005-1970 Rev D
1026 Input Board
Schematic and PCB Prints

06/14/2004

Ivie
Technologies Inc.

MECHANICAL SUPPORT

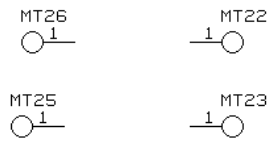

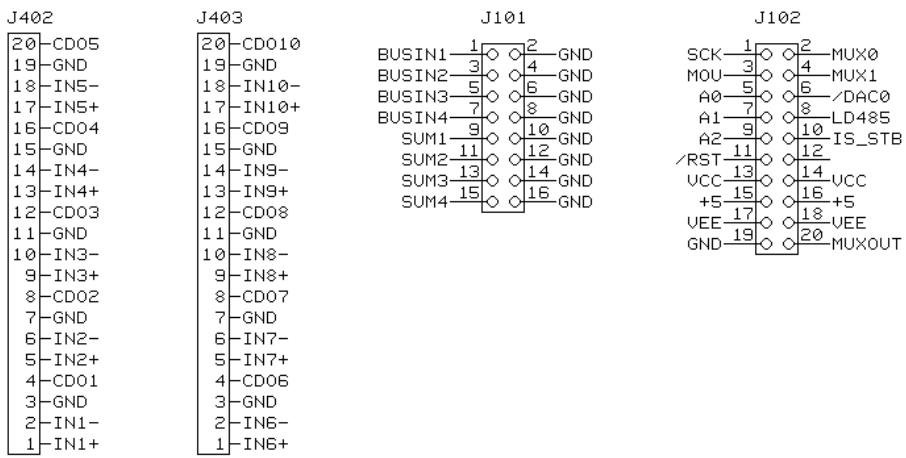

IVIE Technologies, Inc	
1605 N WEST STATE ST, LEHI, UTAH 84043	
1026 Integrated Mixer	
D 1026I.P01	002-1970 REV D0
DATE: 06/14/04 15:52:51	SHEET 01 OF 16

ClibPDF - www.fastio.com

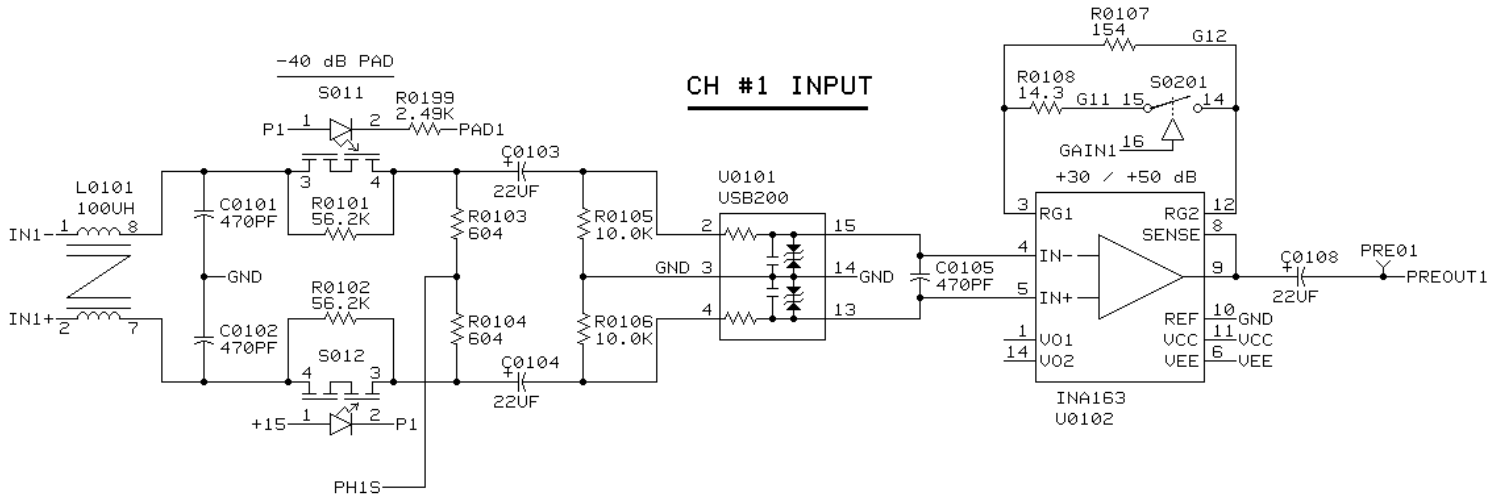

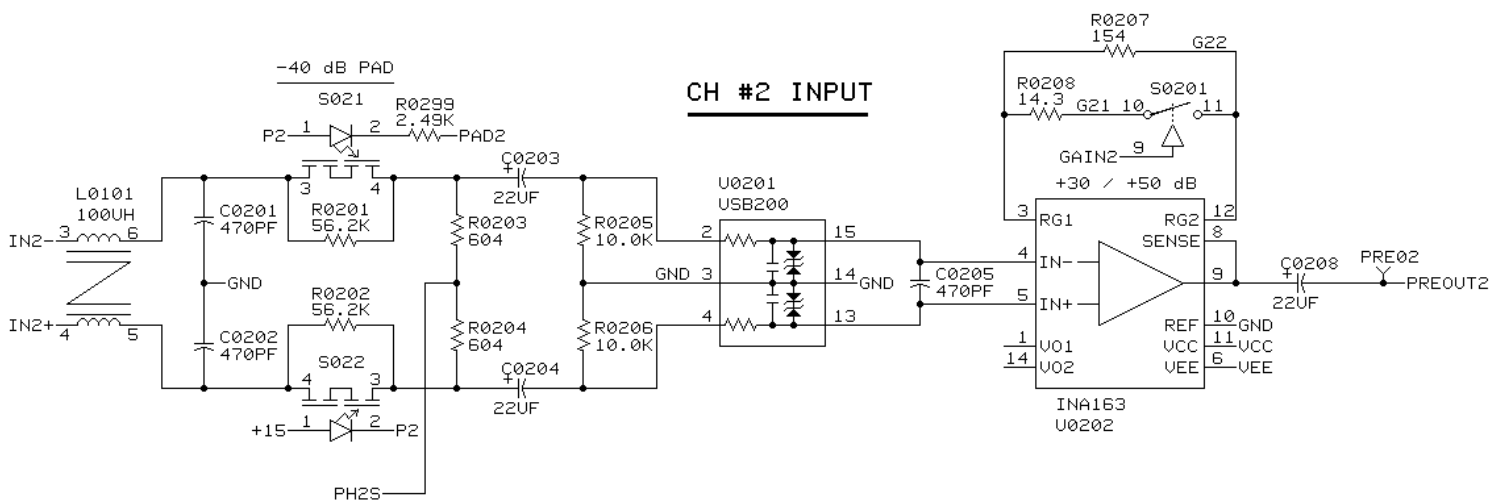

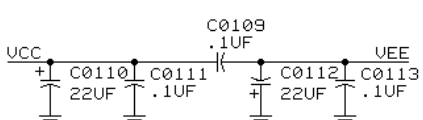

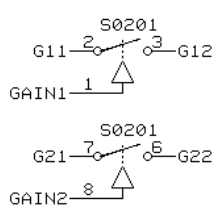

IVIE Technologies, Inc			
1605 N WEST STATE ST, LEHI, UTAH 84043			
1026 Integrated Mixer			
D	1026I.P02	002-1970	REV D0
DATE: 06/14/04 15:52:52		SHEET 02 OF 16	

ClibPDF - www.fastio.com

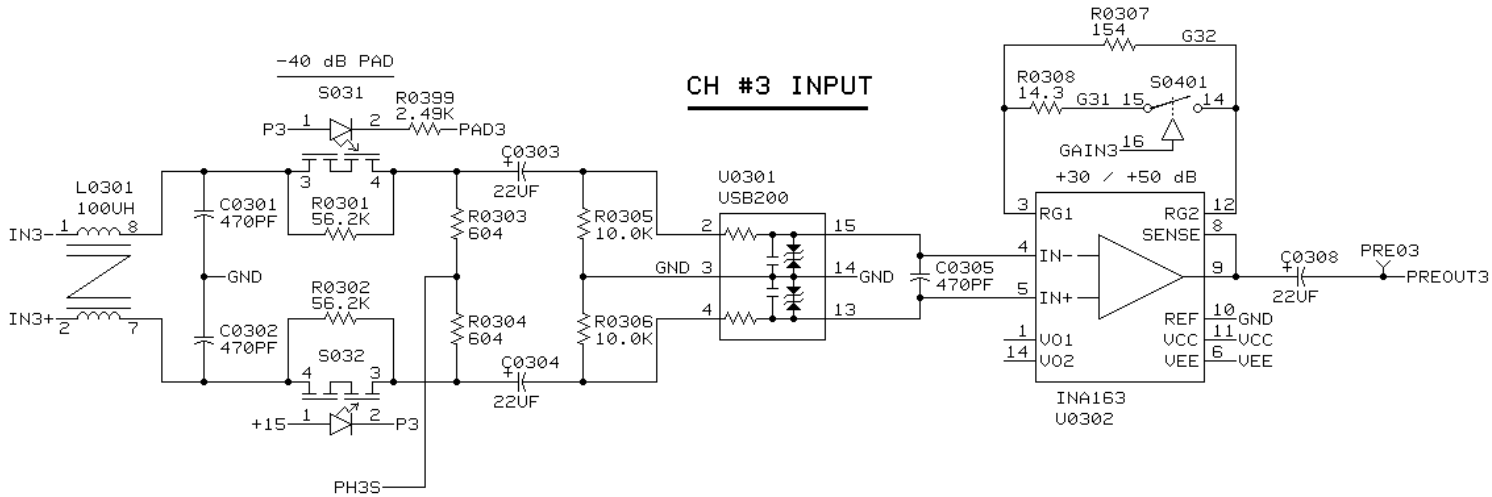

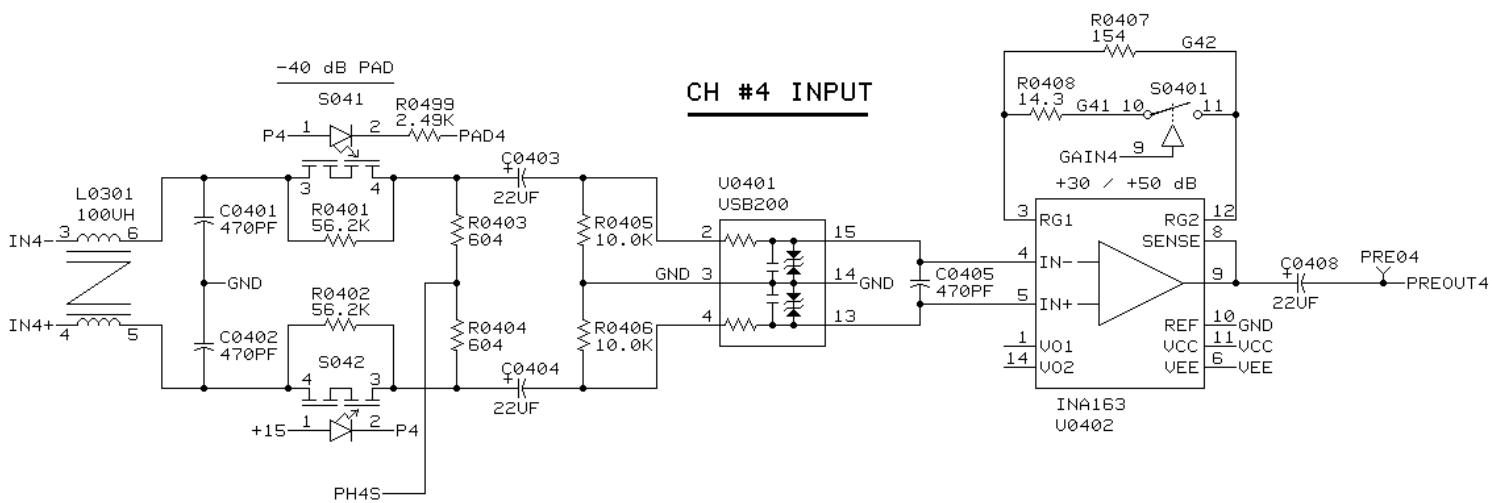

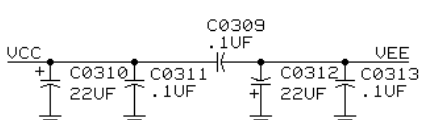

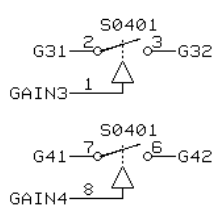

IVIE Technologies, Inc			
1605 N WEST STATE ST, LEHI, UTAH 84043			
1026 Integrated Mixer			
D	1026I.P03	002-1970	REV D0
DATE: 06/14/04 15:52:53		SHEET 03 OF 16	

ClibPDF - www.fastio.com

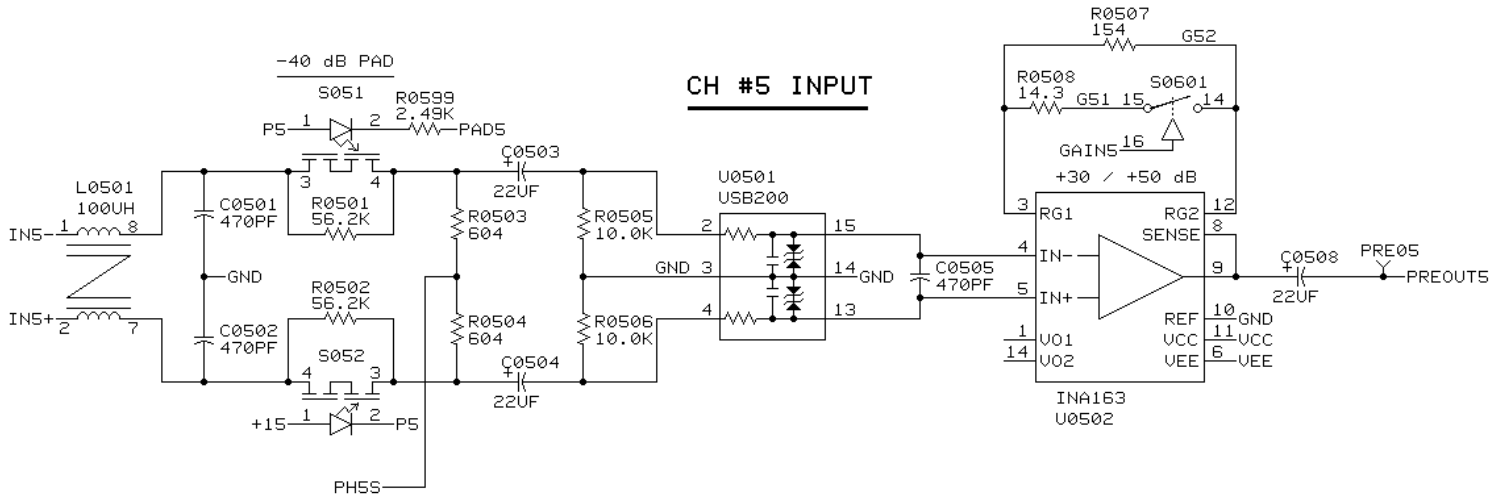

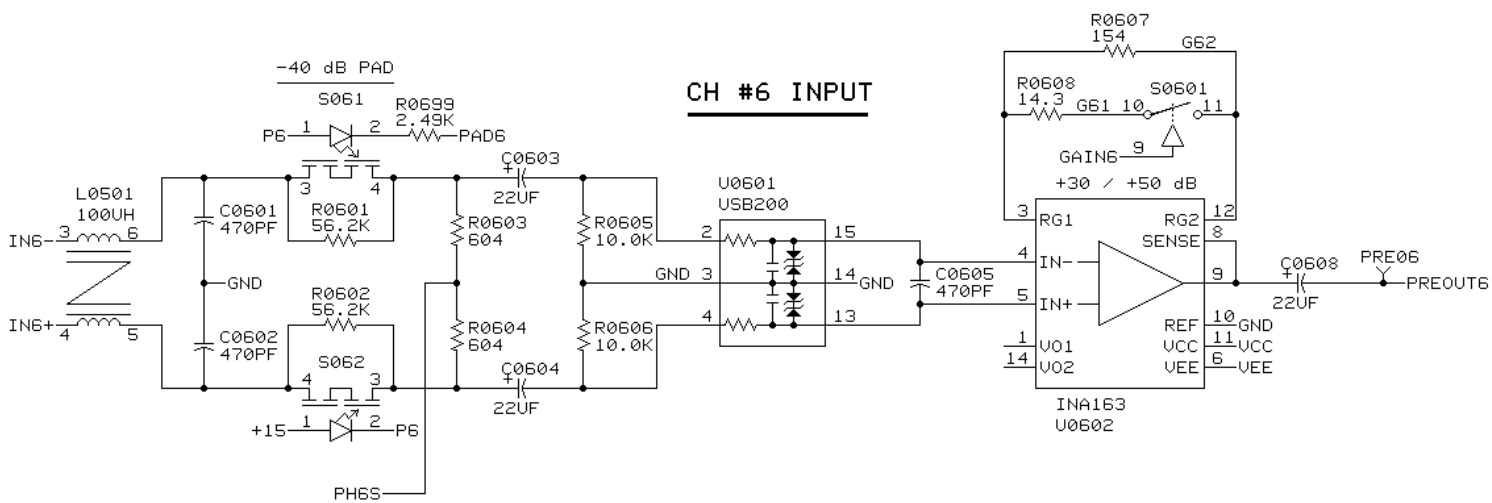

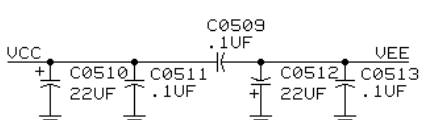

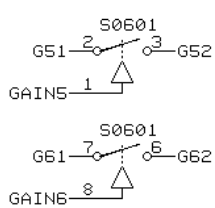

IVIE Technologies, Inc			
1605 N WEST STATE ST, LEHI, UTAH 84043			
1026 Integrated Mixer			
D	1026I.P04	002-1970	REV D0
DATE: 06/14/04 15:52:54		SHEET 04 OF 16	

ClibPDF - www.fastio.com

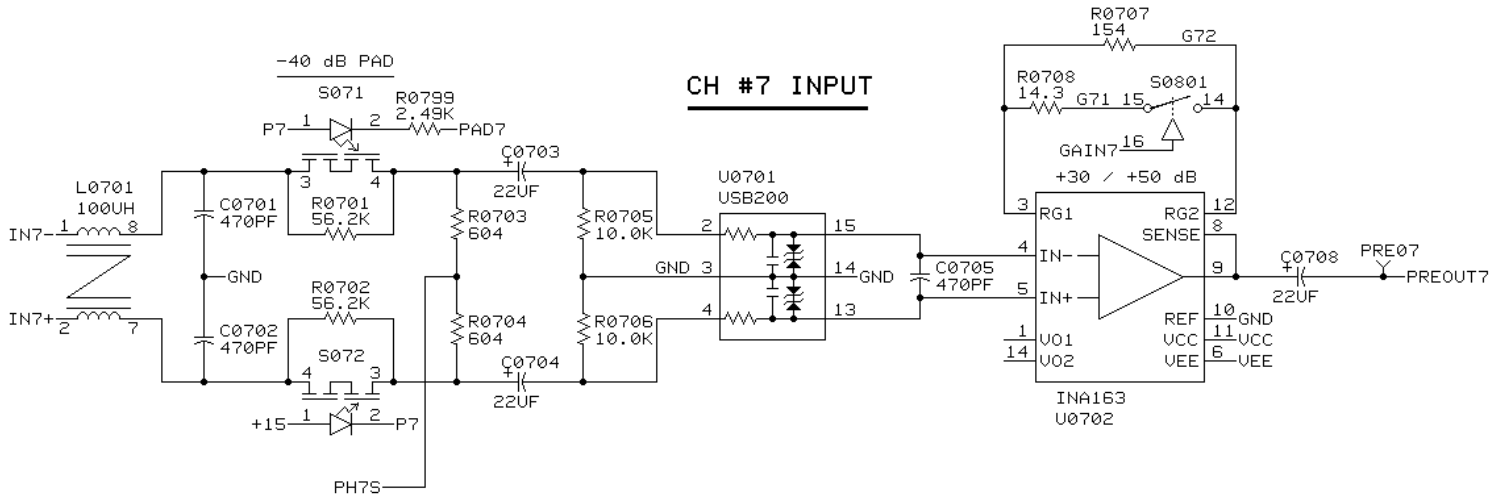

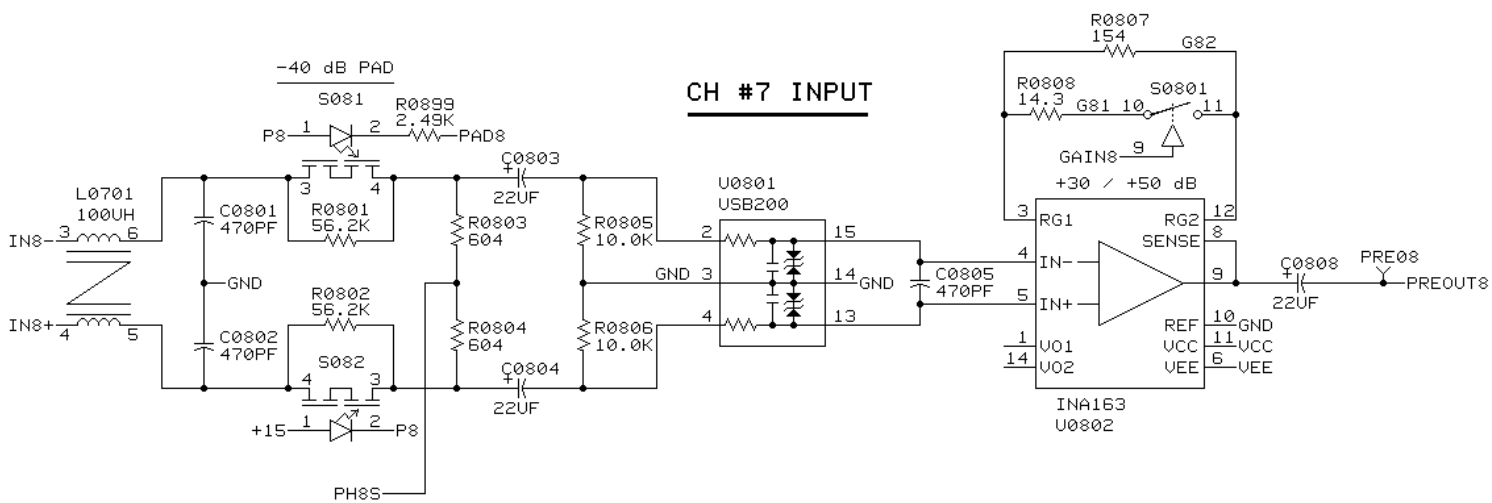

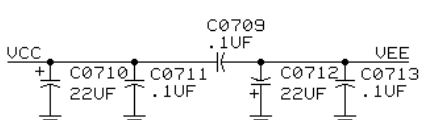

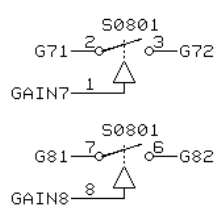

IVIE Technologies, Inc			
1605 N WEST STATE ST, LEHI, UTAH 84043			
1026 Integrated Mixer			
D	1026I.P05	002-1970	REV D0
DATE: 06/14/04 15:52:55		SHEET 05 OF 16	

ClibPDF - www.fastio.com

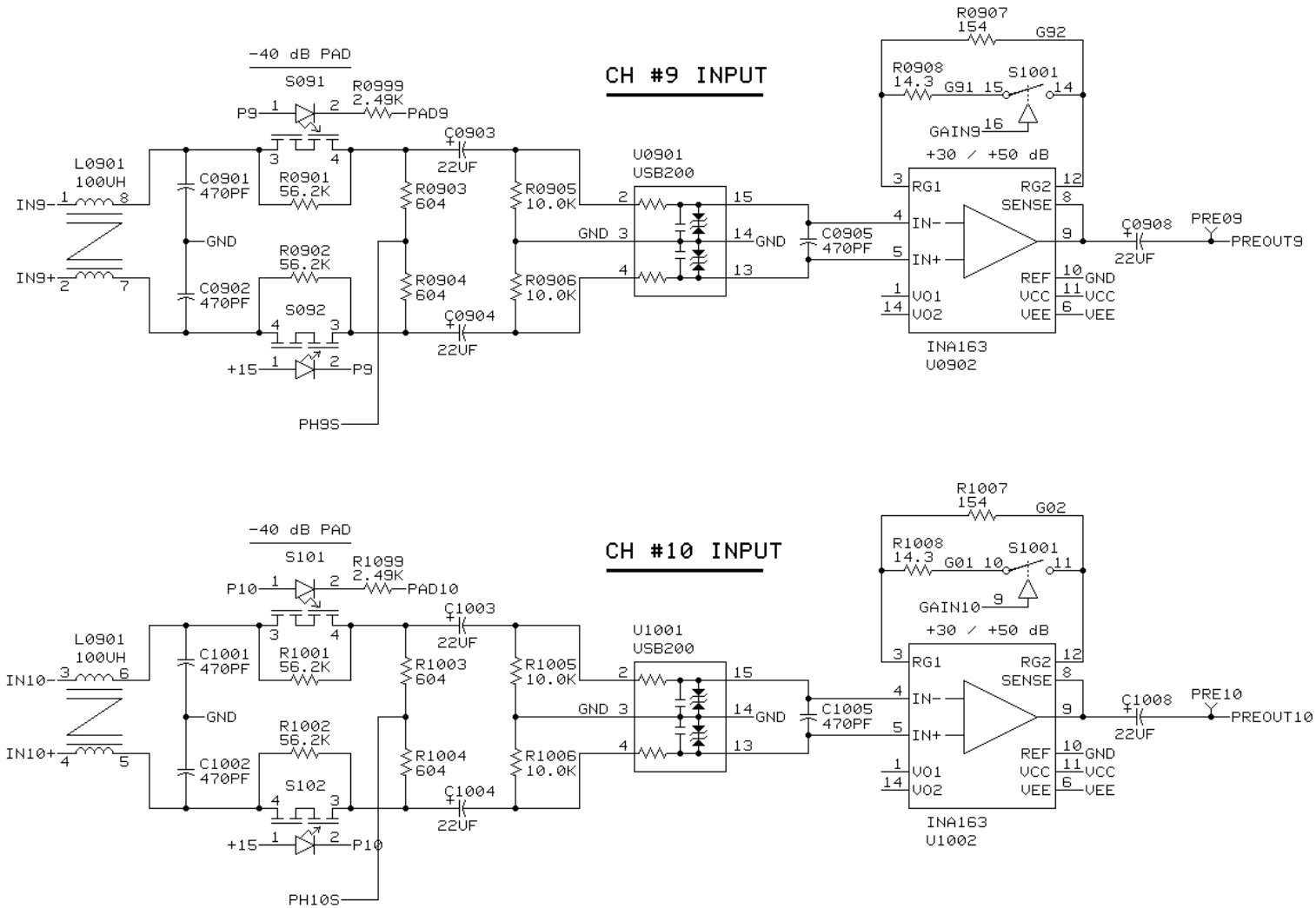

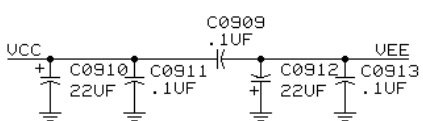

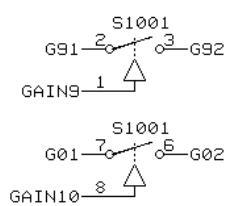

IVIE Technologies, Inc			
1605 N WEST STATE ST, LEHI, UTAH 84043			
1026 Integrated Mixer			
D	1026I.P06	002-1970	REV D0
DATE: 06/14/04 15:52:56		SHEET 06 OF 16	

ClibPDF - www.fastio.com

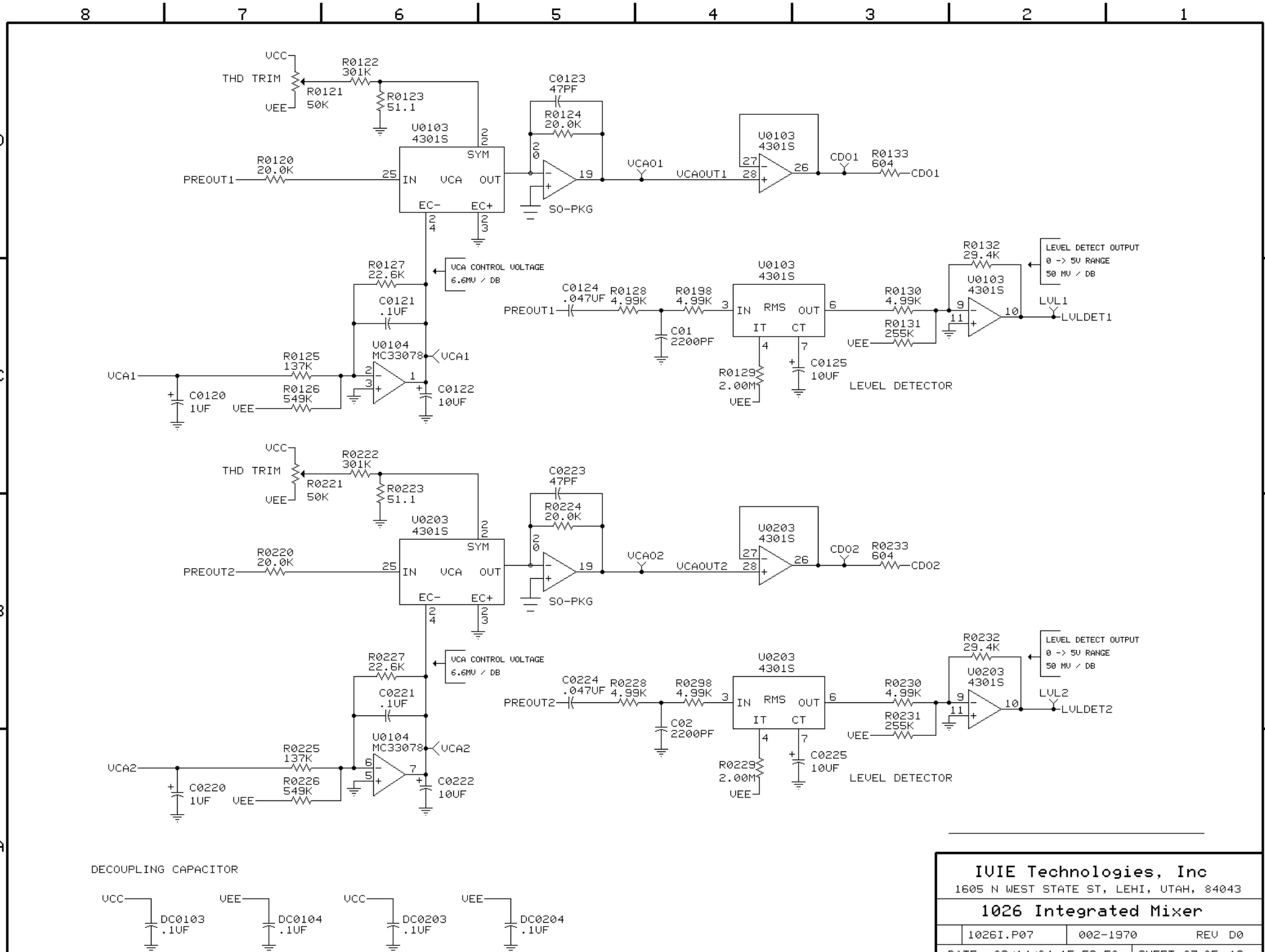

IVIE Technologies, Inc
1605 N WEST STATE ST, LEHI, UTAH, 84043

1026 Integrated Mixer

1026I.P07	002-1970	REV D0
DATE: 06/14/04 15:52:58	SHEET 07 OF 16	

ClibPDF - www.fastio.com

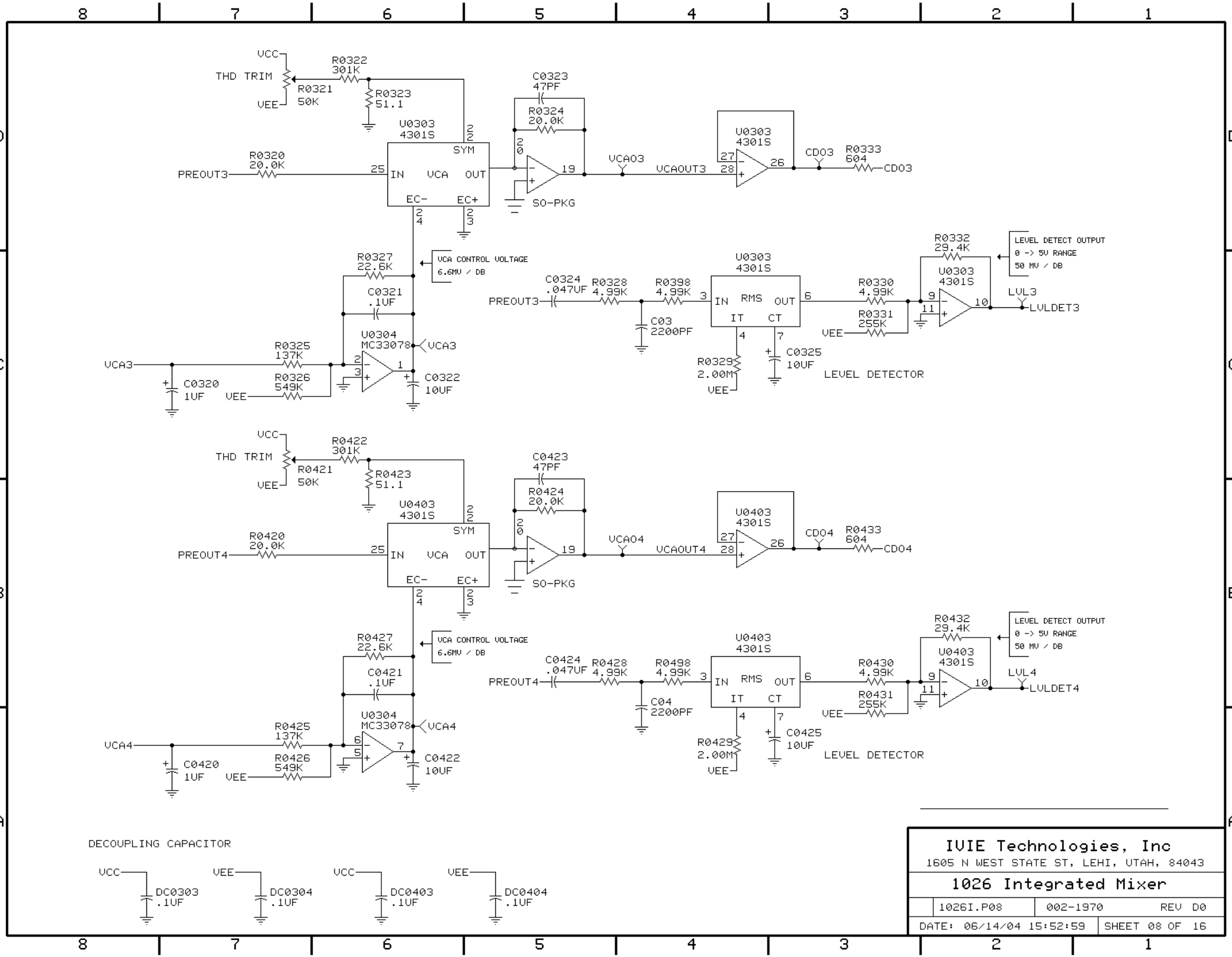

ClibPDF - www.fastio.com

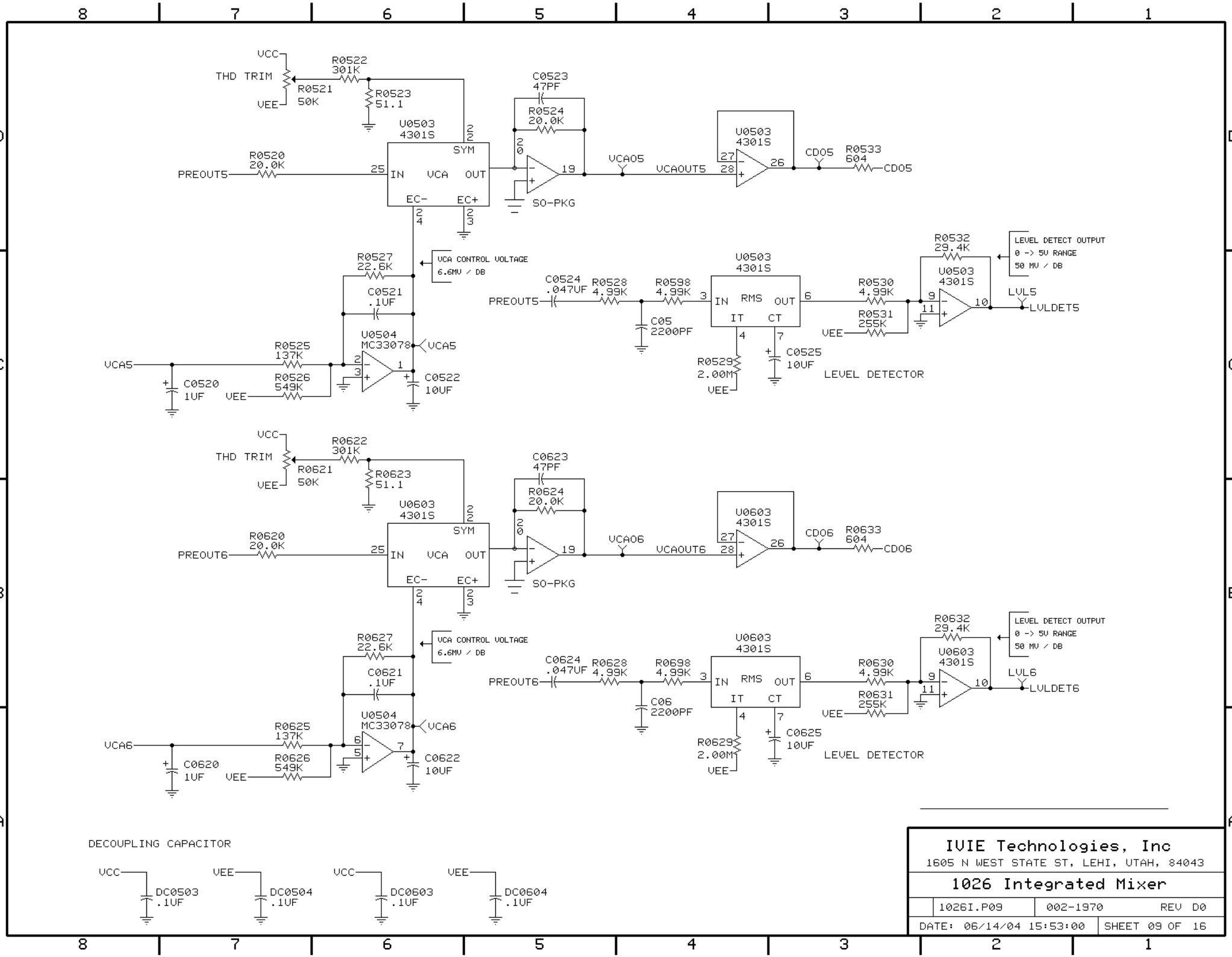

ClibPDF - www.fastio.com

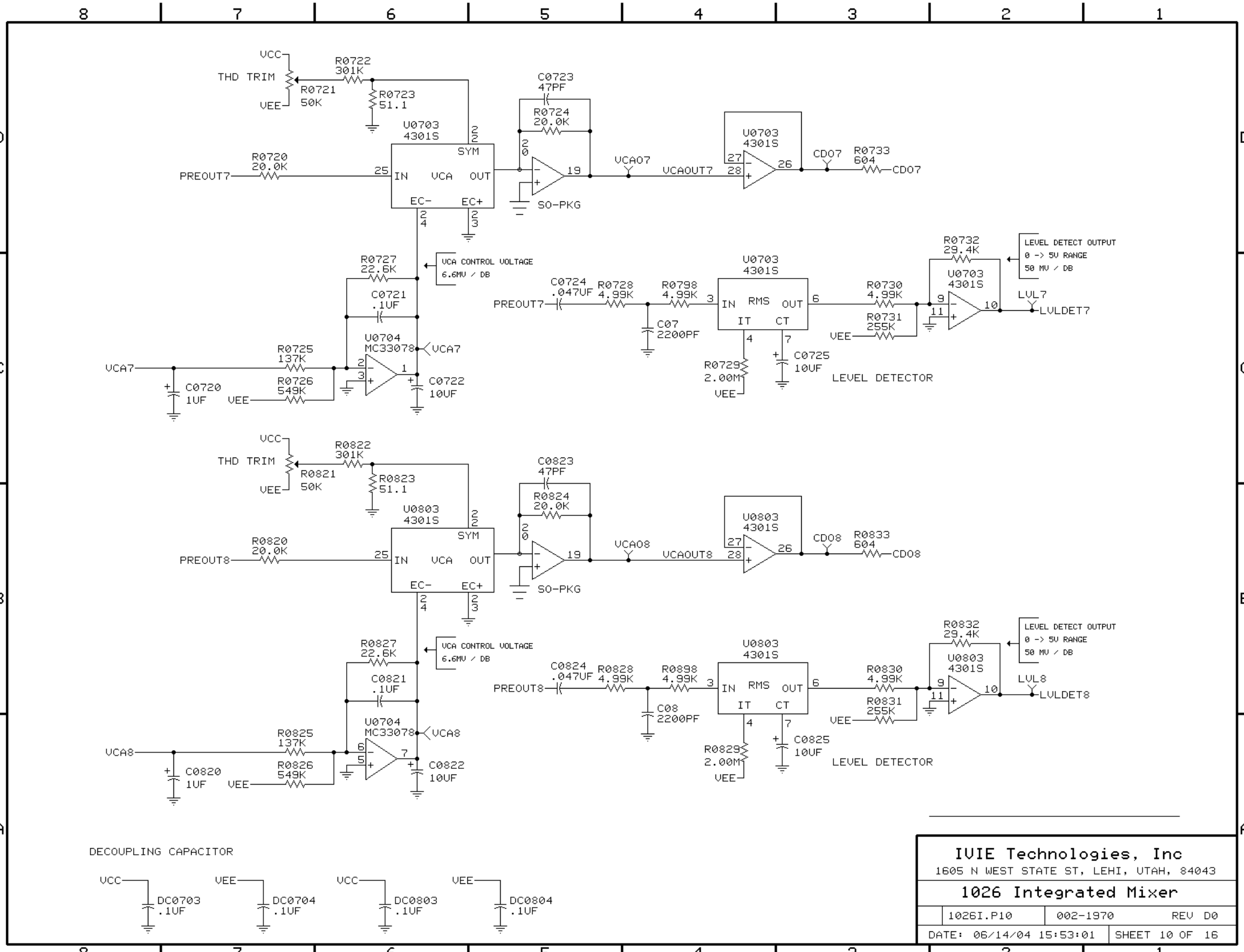

ClibPDF - www.fastio.com

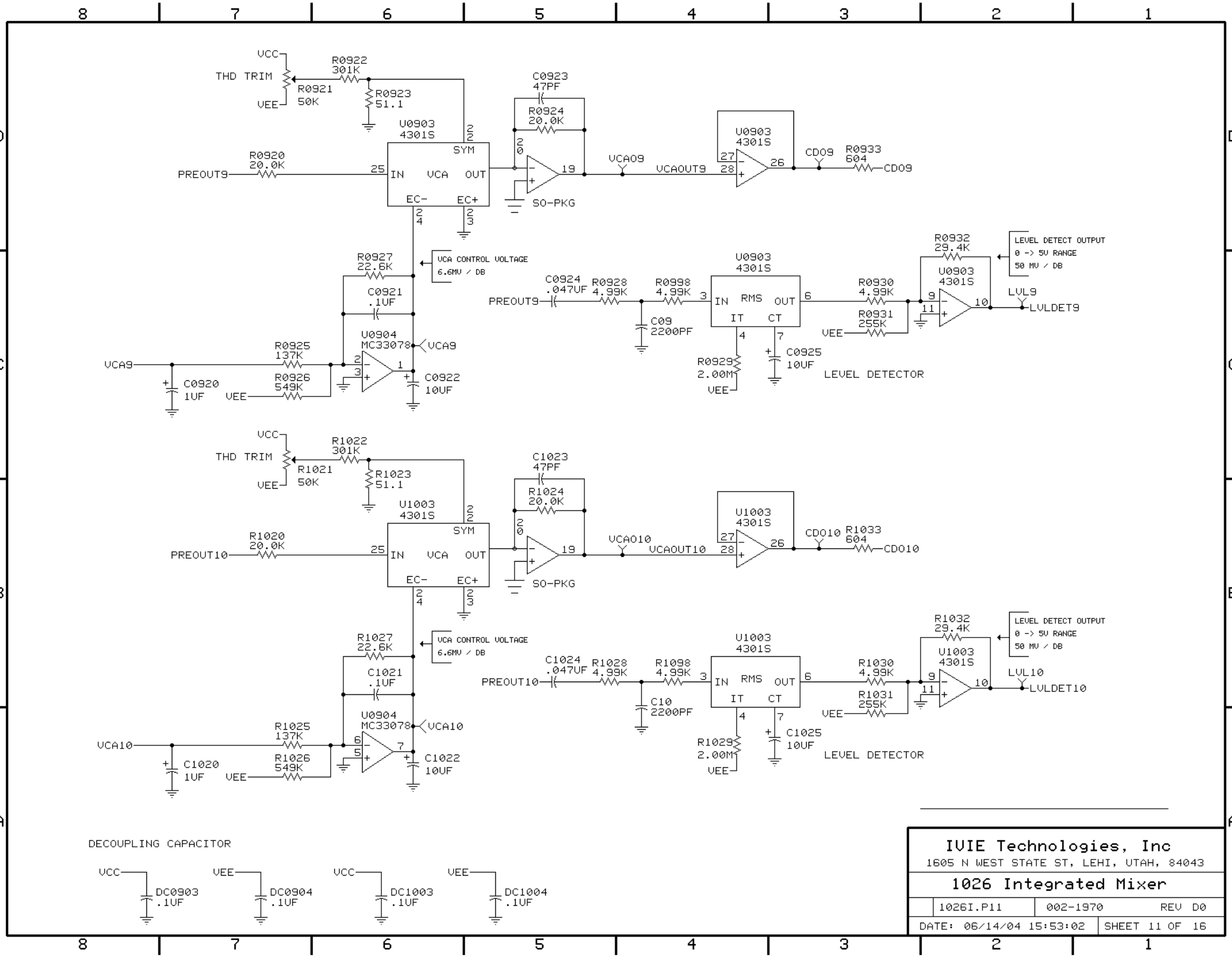

IVIE Technologies, Inc
1605 N WEST STATE ST, LEHI, UTAH, 84043

1026 Integrated Mixer

1026I.P11	002-1970	REV D0
DATE: 06/14/04 15:53:02	SHEET 11 OF 16	

ClibPDF - www.fastio.com

1026 MIX BUS

IVIE Technologies, Inc 1605 NW STATE STREET, LEHI, UTAH 84043			
1026 Integrated Mixer			
D	1026I.P12	002-1970	REV D0
DATE: 06/14/04 15:53:04		SHEET 12 OF 16	

ClibPDF - www.fastio.com

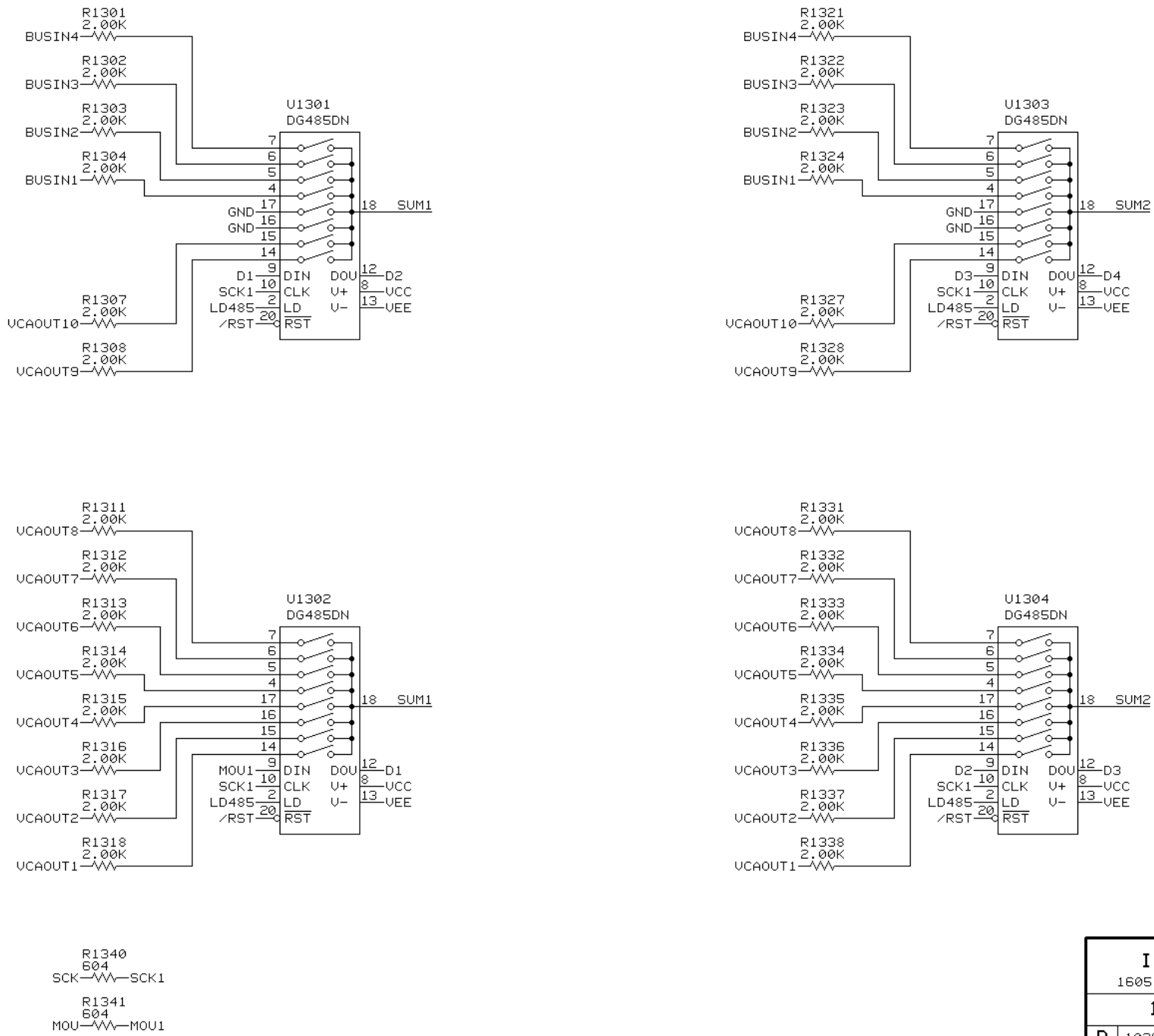

IVIE Technologies, Inc
1605 N WEST STATE ST, LEHI, UTAH 84043

1026 Integrated Mixer

D	1026I.P13	002-1970	REV D0
DATE: 06/14/04 15:53:05		SHEET 13 OF 16	

ClibPDF - www.fastio.com

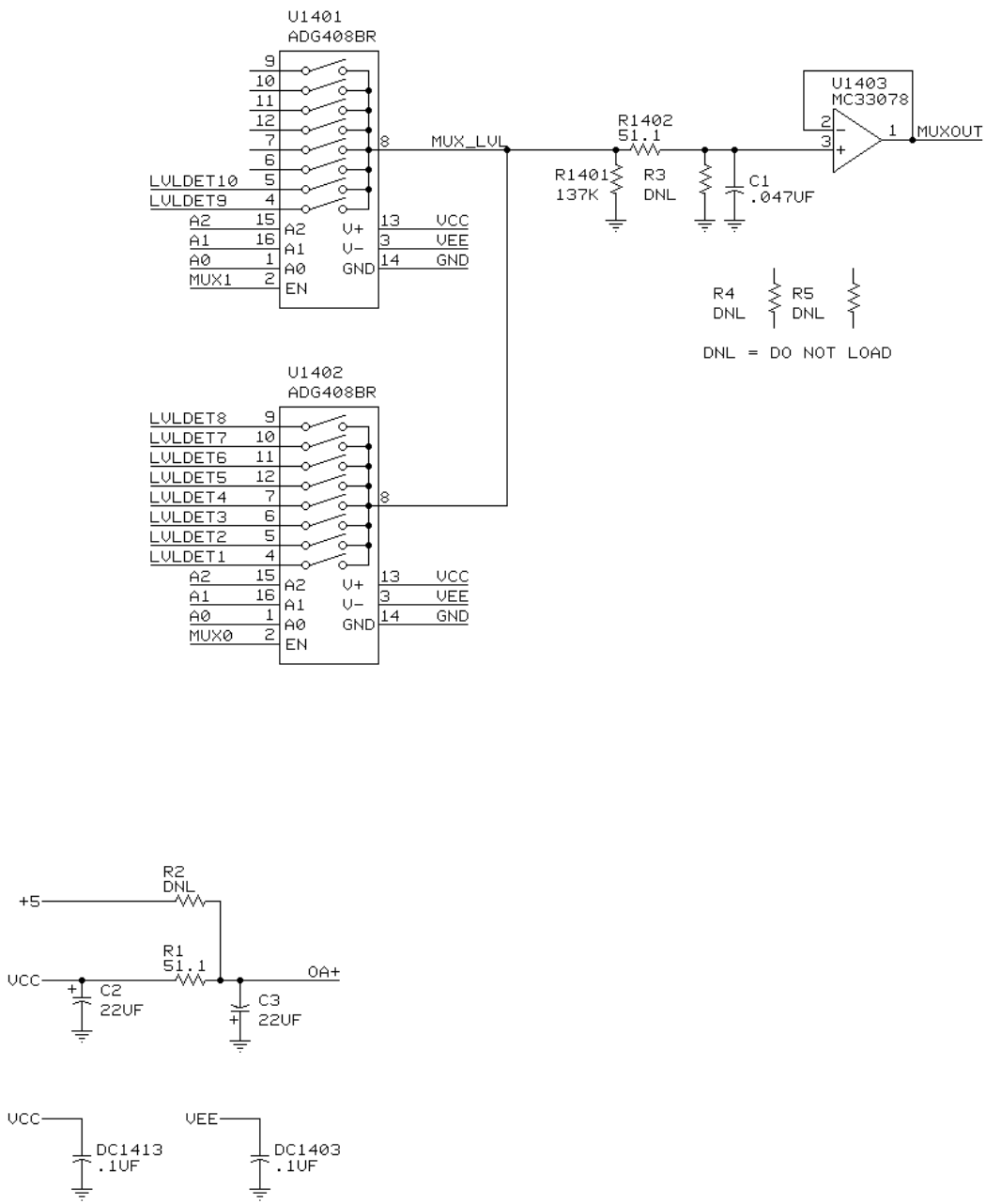

IVIE Technologies, Inc
1605 N WEST STATE ST, LEHI, UTAH 84043

1026 Integrated Mixer

D	1026I.P14	002-1970	REV D0
DATE: 06/14/04 15:53:06		SHEET 14 OF 16	

ClibPDF - www.fastio.com

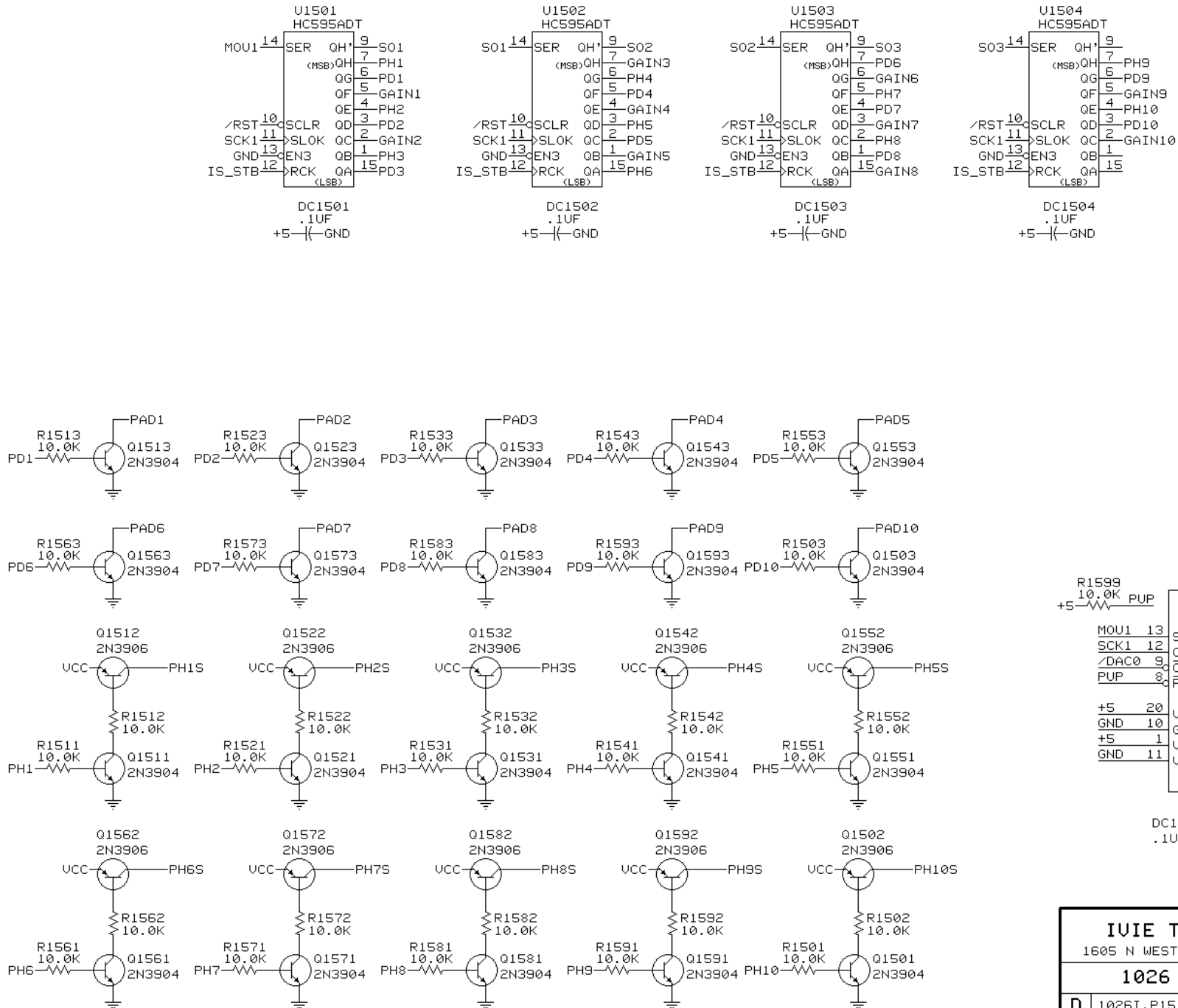

IVIE Technologies, Inc
1605 N WEST STATE ST, LEHI, UTAH 84043

1026 Integrated Mixer

D	1026I.P15	002-1970	REV D0
DATE: 06/14/04 15:53:07		SHEET 15 OF 16	

ClibPDF - www.fastio.com

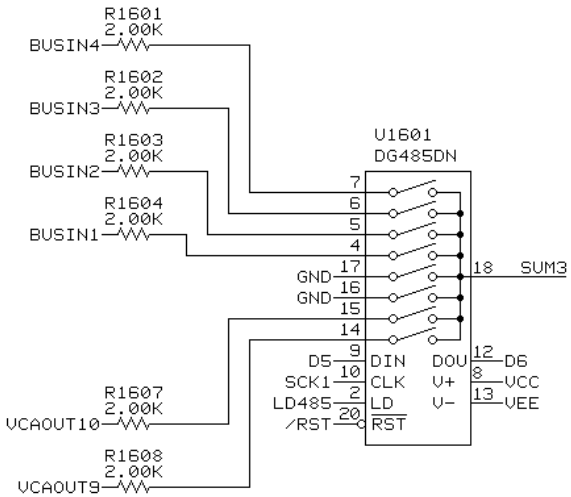

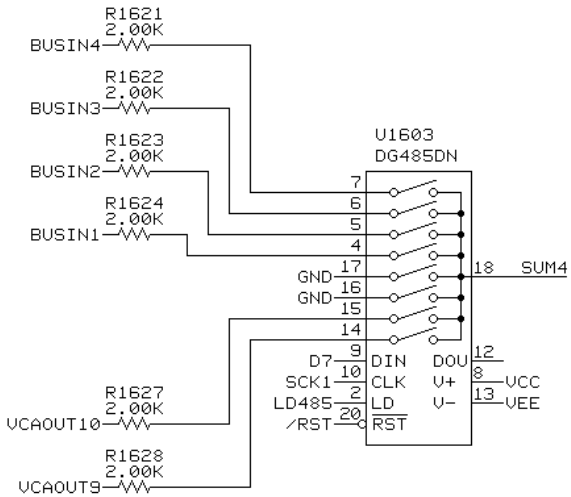

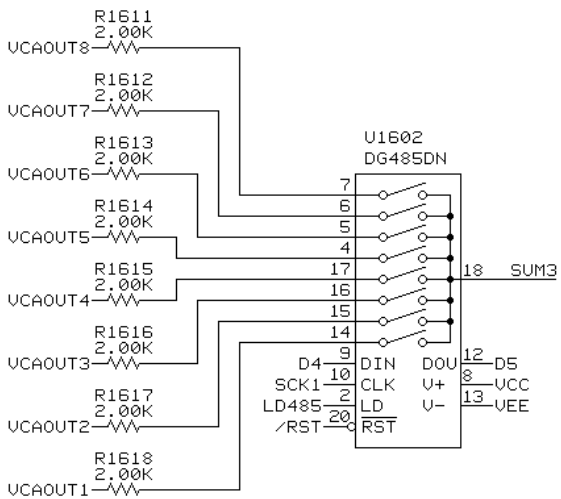

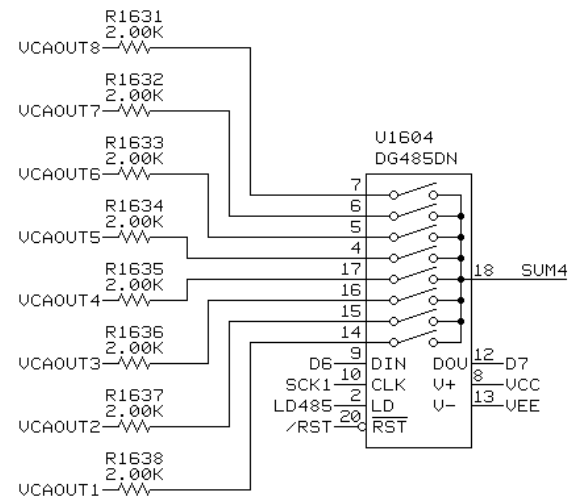

IVIE Technologies, Inc
1605 N WEST STATE ST, LEHI, UTAH 84043

1026 Integrated Mixer

D	1026I.P16	002-1970	REV D0
DATE: 06/14/04 15:53:08		SHEET 16 OF 16	

ClibPDF - www.fastio.com

CAM350 V 8.5 : Tue Jun 15 08:16:10 2004 - 065-1970_D.cam : tassembly.pho

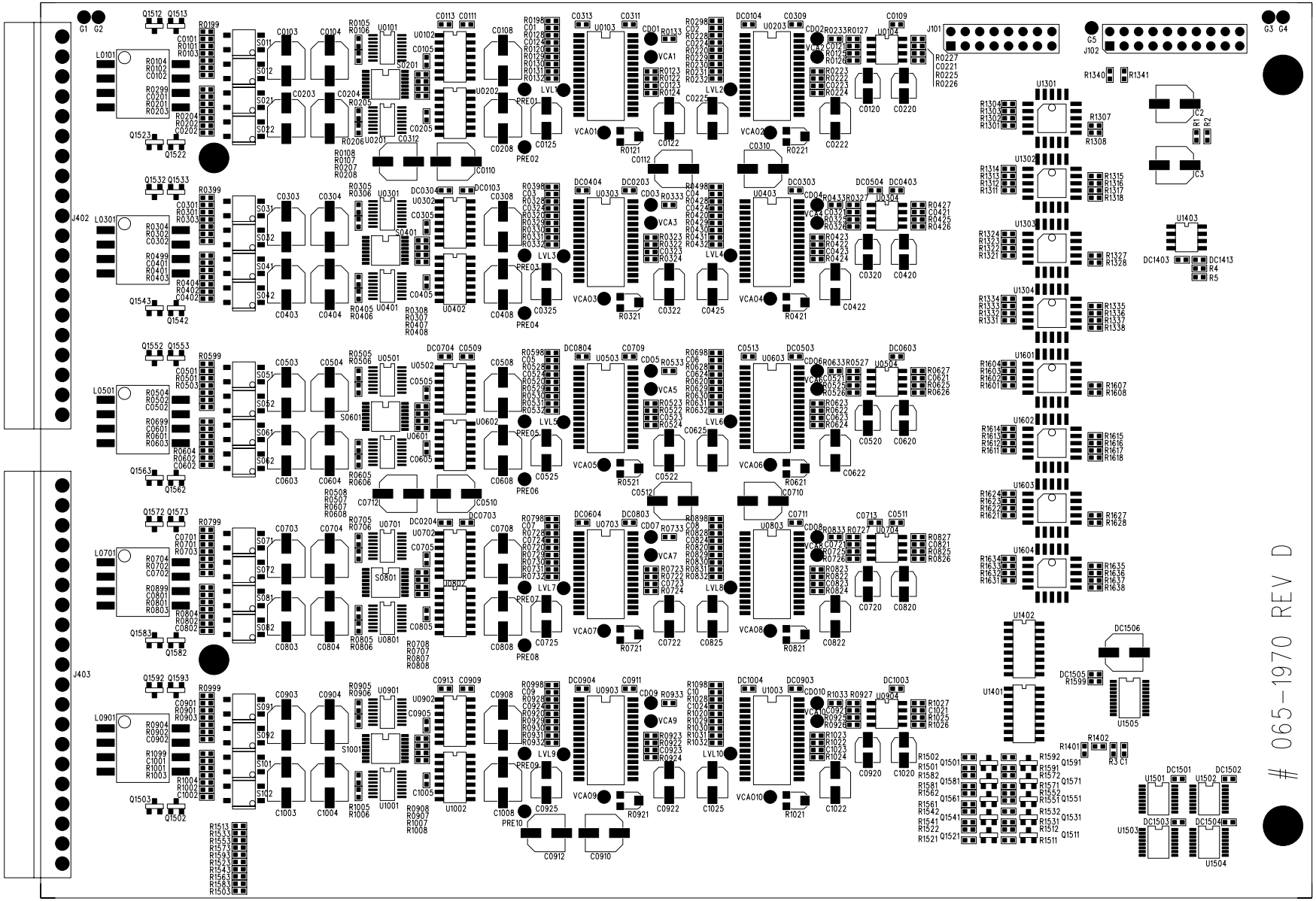

		Ivie Technologies, Inc.
		June 11, 2004
	ASSEMBLY DRAWING TOP	# 065-1970 REV D

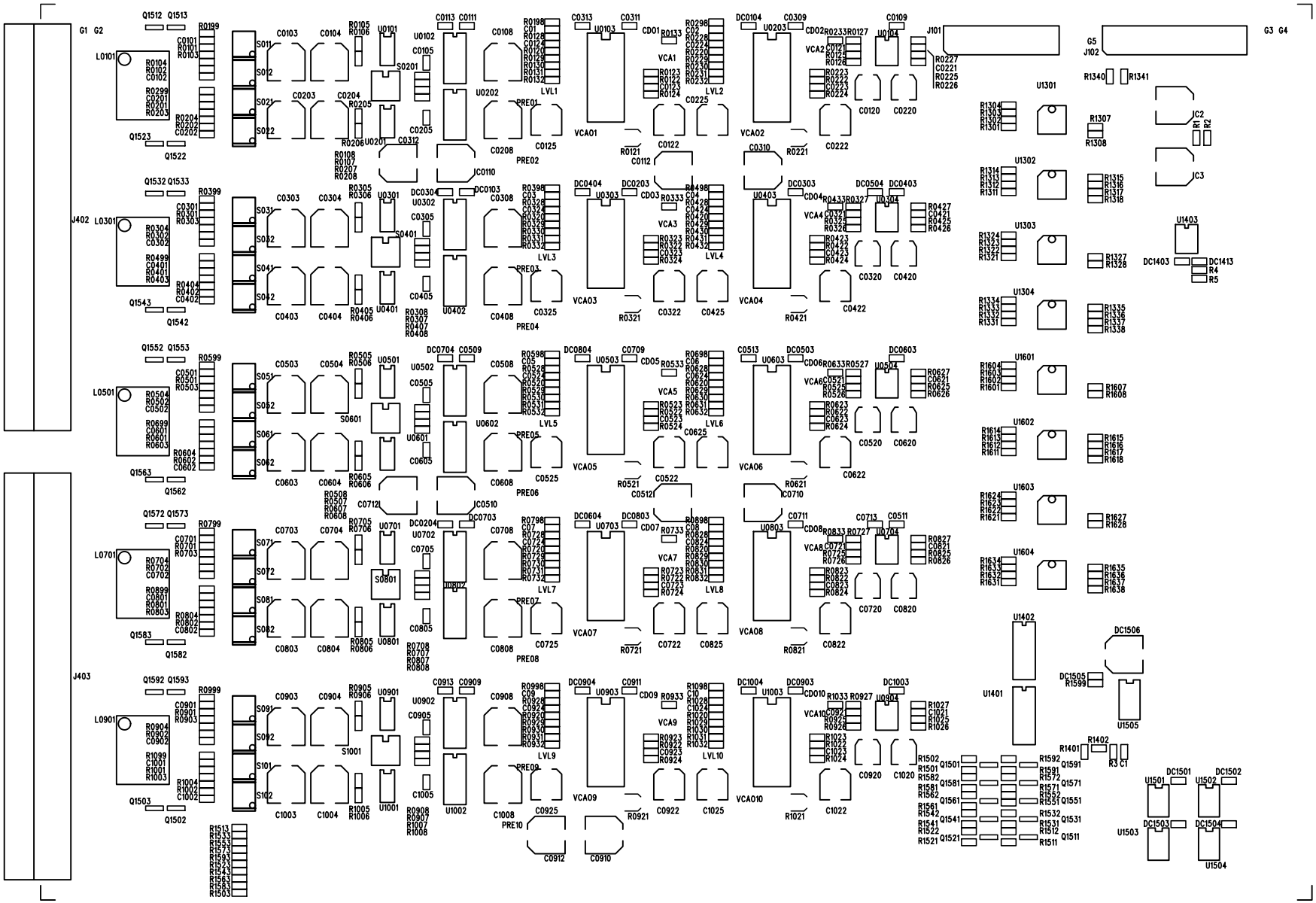

	TOP SILK SCREEN	Ivie Technologies, Inc.
		June 11, 2004
		# 065-1970 REV D

CAM350 V 8.5 : Tue Jun 15 08:16:11 2004 - 065-1970_D.cam : componentside.p

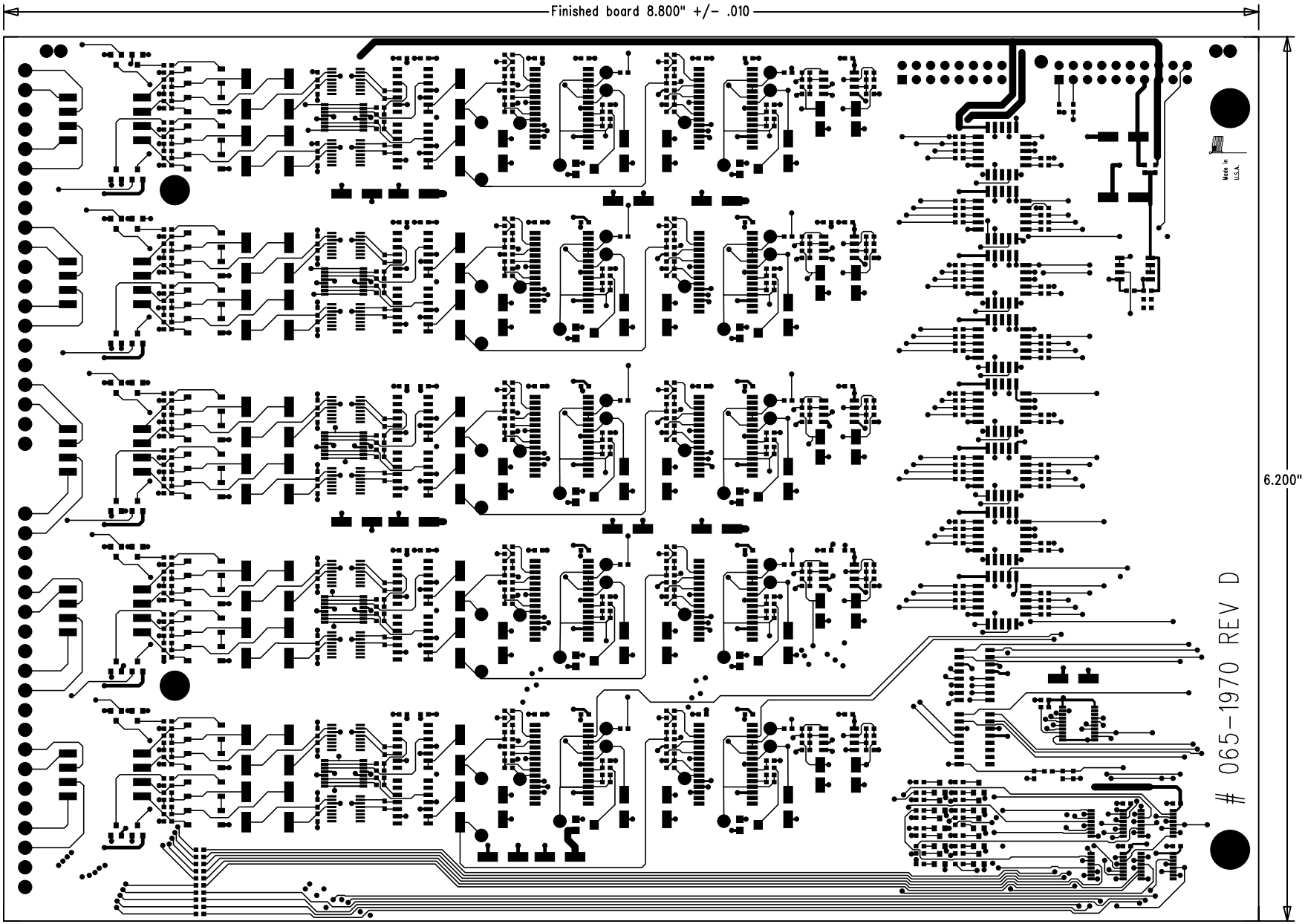

BRDL1 PRIMARY SIDE			
			Ivie Technologies, Inc.
			June 11, 2004
			# 065-1970 REV D

CAM350 V 8.5 : Tue Jun 15 08:16:11 2004 - 065-1970_D.cam : L3-pwr.pho

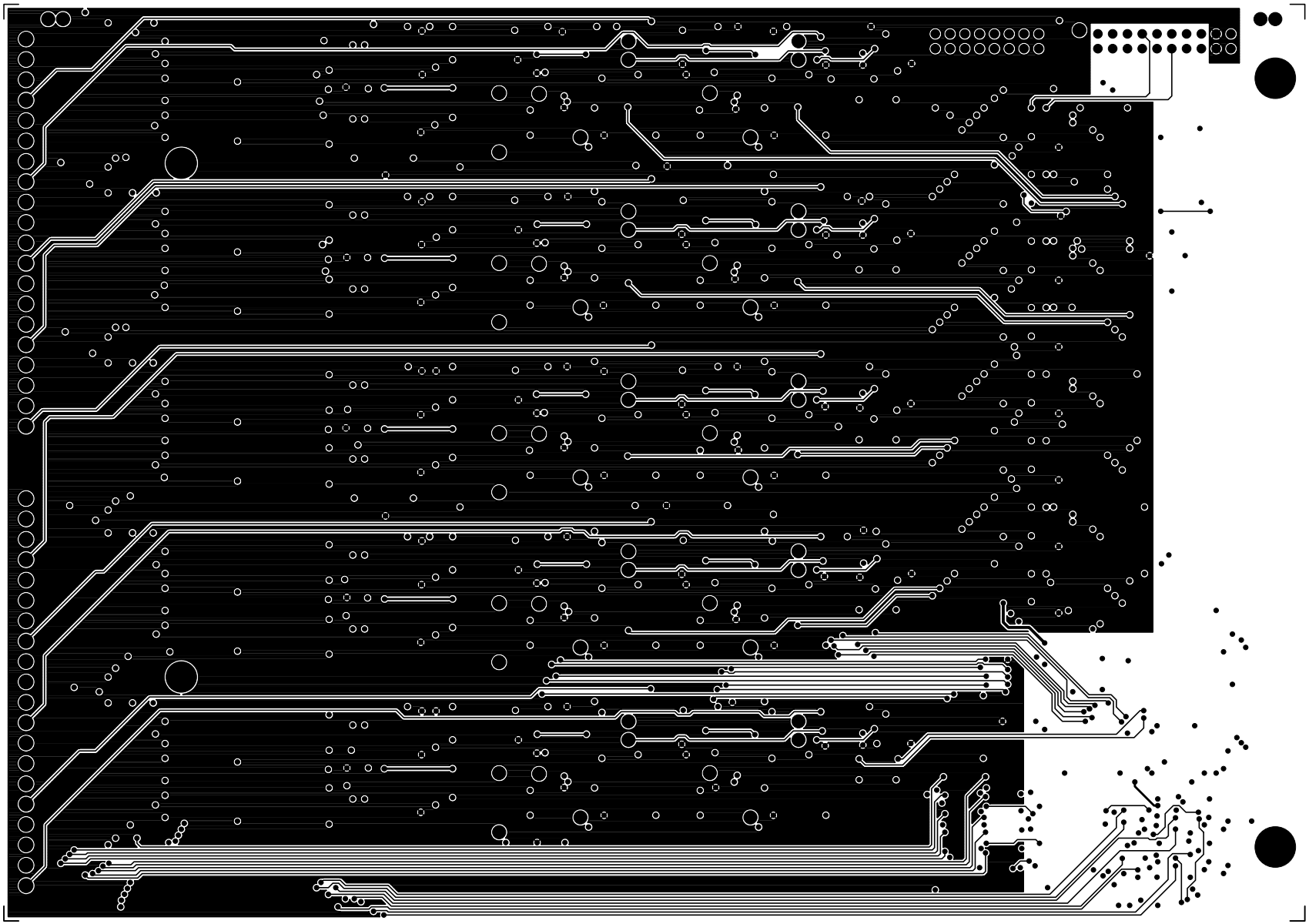

		BRDL3 PLANE_+5V
		Ivie Technologies, Inc.
		June 11, 2004
		# 065-1970 REV D

CAM350 V 8.5 : Tue Jun 15 08:16:12 2004 - 065-1970_D.cam : L4SolderSide.ph

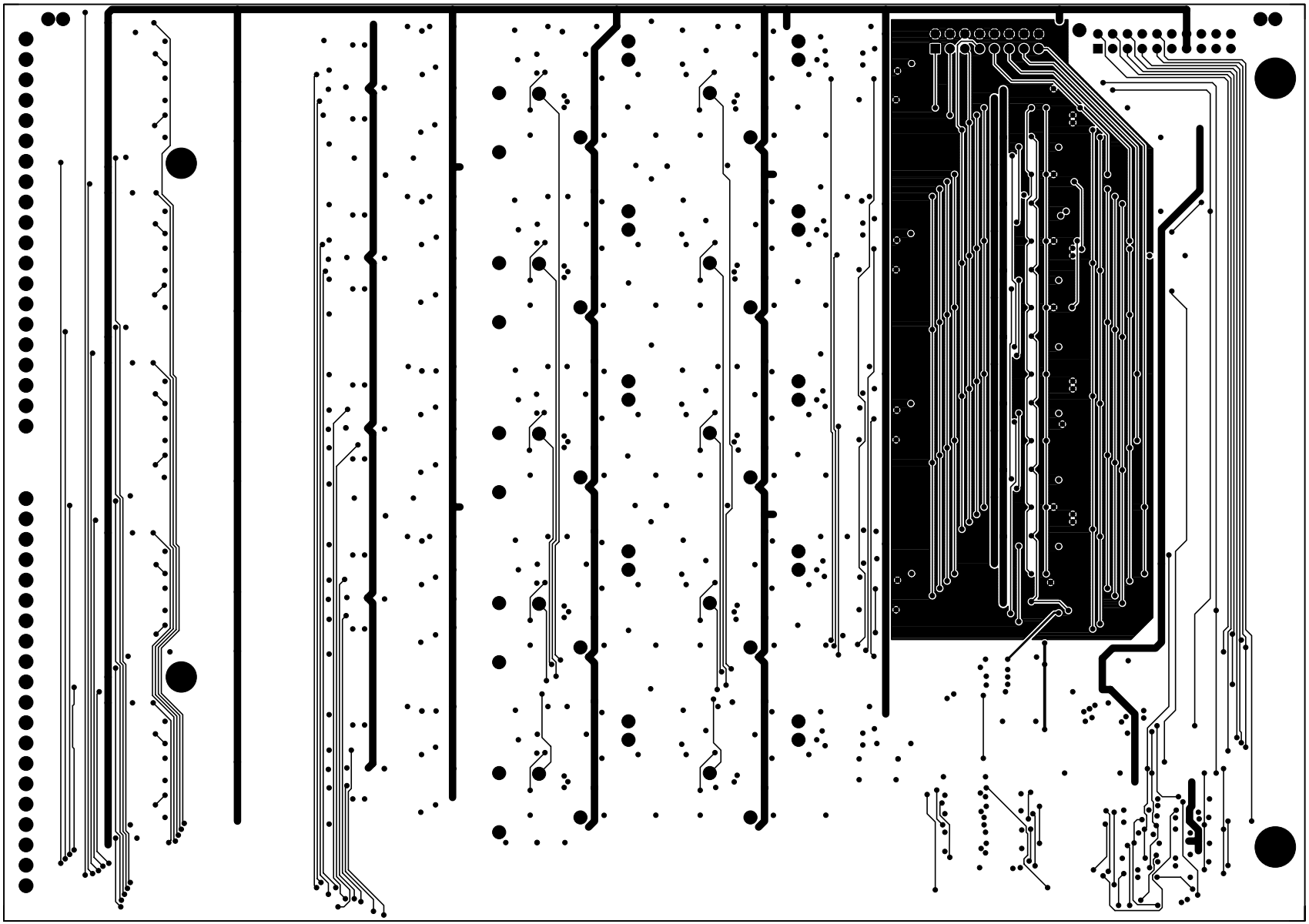

		BRDL4 SECONDARY SIDE
		Ivie Technologies, Inc.
		June 11, 2004
		# 065-1970 REV D

Ivie Technologies

005-1970 Rev D
1026 Input Board
Bill Of Materials

06/14/2004

Ivie
Technologies Inc.

Parts List for Assembly P/N: 005-1970_D

Printed 6/14/2004

005-1970_D

Assembly, 1026 Universal Input Board

Type	PL	Size	
Revision	D	Profile	
Status	U	Tooling	
Date	6/14/2004	Artwork	
By		Stock Bin	

Item	Qty	P/N	Title	Size	Reference(m)
1	1	065-1970	PCB, 1026 Input Daughter		
2	52	107-0020	SMT Cap, 0.1uF, 25v, Y5V, 0603	0603	C0109 C0111 C0113 C0121 C0221 C0309 C0311 C0313 C0321 C0421 C0509 C0511 C0513 C0521 C0621 C0709 C0711 C0713 C0721 C0821 C0909 C0911 C0913 C0921 C1021 DC0103 DC0104 DC0203 DC0204 DC0303 DC0304 DC0403 DC0404 DC0503 DC0504 DC0603 DC0604 DC0703 DC0704 DC0803 DC0804 DC0903 DC0904 DC1003 DC1004 DC1403 DC1413 DC1501 DC1502 DC1503 DC1504 DC1505
3	30	107-0080	SMT Cap, 470pF, 50v, X7R,10%, 0603	0603	C0101 C0102 C0105 C0201 C0202 C0205 C0301 C0302 C0305 C0401 C0402 C0405 C0501 C0502 C0505 C0601 C0602 C0605 C0701 C0702 C0705 C0801 C0802 C0805 C0901 C0902 C0905 C1001 C1002 C1005
4	10	107-0090	SMT Cap, .047UF, 25v, X7R,10%, 0603	0603	C0124 C0224 C0324 C0424 C0524 C0624 C0724 C0824 C0924 C1024
5	11	107-0100	SMT Cap, 47pF, 50v, NPO, 5%, 0603	0603	C1 C0123 C0223 C0323 C0423 C0523 C0623 C0723 C0823 C0923 C1023
6	10	107-X090	SMT Cap, 2200pF, 50v, X7R, 0603	0603	C01 C02 C03 C04 C05 C06 C07 C08 C09 C10
7	10	109-0010	SMT Elec, 1UF, 50v, 4mm Dia Case	4mm Dia	C0120 C0220 C0320 C0420 C0520 C0620 C0720 C0820 C0920 C1020
8	20	109-0020	SMT Elec, 10UF, 25v, 5mm Dia Case	5mm Dia	C0122 C0125 C0222 C0225 C0322 C0325 C0422 C0425 C0522 C0525 C0622 C0625 C0722 C0725 C0822 C0825 C0922 C0925 C1022 C1025
9	43	109-0030	SMT Elec, 22UF, 25v, 6.3mm Dia Case	6.3mm Dia	C0103 C0104 C0108 C0110 C0112 C0203 C0204 C0208 C0303 C0304 C0308 C0310 C0312 C0403 C0404 C0408 C0503 C0504 C0508 C0510 C0512 C0603 C0604 C0608 C0703 C0704 C0708 C0710 C0712 C0803 C0804 C0808 C0903 C0904 C0908 C0910 C0912 C1003 C1004 C1008 C2 C3 DC1506
10	10	123-0010	SMT POT, Cermet Trimmer, 50K, 3mm	3mm	R0121 R0221 R0321 R0421 R0521 R0621 R0721 R0821 R0921 R1021
11	51	127-0030	SMT Res, 10.0K, 1/16w, 1%, 0603	0603	R0105 R0106 R0205 R0206 R0305 R0306 R0405 R0406 R0505 R0506 R0605 R0606 R0705 R0706 R0805 R0806 R0905 R0906 R1005 R1006 R1501 R1502 R1503 R1511 R1512 R1513 R1521 R1522 R1523 R1531 R1532 R1533 R1541 R1542 R1543 R1551 R1552 R1553 R1561 R1562 R1563 R1571 R1572 R1573 R1581 R1582 R1583 R1591 R1592 R1593 R1599
12	11	127-0480	SMT Res, 137K, 1/16w, 1%, 0603	0603	R0125 R0225 R0325 R0425 R0525 R0625 R0725 R0825 R0925 R1025 R1401

Ivie Technologies, Inc
1605 N West State Street, Lehi, Utah, 84043,
(801) 766-7600 Fax (801) 766-8282

Item	Qty	P/N	Title	Size	Reference(m)
13	10	127-0555	SMT Res, 14.3, 1/16w, 1%, 0603	0603	R0108 R0208 R0308 R0408 R0508 R0608 R0708 R0808 R0908 R1008
14	10	127-0675	SMT Res, 154, 1/16w, 1%, 0603	0603	R0107 R0207 R0307 R0407 R0507 R0607 R0707 R0807 R0907 R1007
15	56	127-0980	SMT Res, 2.00K, 1/16w, 1%, 0603	0603	R1301 R1302 R1303 R1304 R1307 R1308 R1311 R1312 R1313 R1314 R1315 R1316 R1317 R1318 R1321 R1322 R1323 R1324 R1327 R1328 R1331 R1332 R1333 R1334 R1335 R1336 R1337 R1338 R1601 R1602 R1603 R1604 R1607 R1608 R1611 R1612 R1613 R1614 R1615 R1616 R1617 R1618 R1621 R1622 R1623 R1624 R1627 R1628 R1631 R1632 R1633 R1634 R1635 R1636 R1637 R1638
16	20	127-0990	SMT Res, 20.0K, 1/16w, 1%, 0603	0603	R0120 R0124 R0220 R0224 R0320 R0324 R0420 R0424 R0520 R0524 R0620 R0624 R0720 R0724 R0820 R0824 R0920 R0924 R1020 R1024
17	10	127-1010	SMT Res, 2.00M, 1/16w, 1%, 0603	0603	R0129 R0229 R0329 R0429 R0529 R0629 R0729 R0829 R0929 R1029
18	10	127-1190	SMT Res, 22.6K, 1/16w, 1%, 0603	0603	R0127 R0227 R0327 R0427 R0527 R0627 R0727 R0827 R0927 R1027
19	10	127-1310	SMT Res, 2.49K, 1/16w, 1%, 0603	0603	R0199 R0299 R0399 R0499 R0599 R0699 R0799 R0899 R0999 R1099
20	10	127-1370	SMT Res, 255K, 1/16w, 1%, 0603	0603	R0131 R0231 R0331 R0431 R0531 R0631 R0731 R0831 R0931 R1031
21	10	127-1550	SMT Res, 29.4K, 1/16w, 1%, 0603	0603	R0132 R0232 R0332 R0432 R0532 R0632 R0732 R0832 R0932 R1032
22	10	127-1590	SMT Res, 301K, 1/16w, 1%, 0603	0603	R0122 R0222 R0322 R0422 R0522 R0622 R0722 R0822 R0922 R1022
23	30	127-2220	SMT Res, 4.99K, 1/16w, 1%, 0603	0603	R0128 R0130 R0198 R0228 R0230 R0298 R0328 R0330 R0398 R0428 R0430 R0498 R0528 R0530 R0598 R0628 R0630 R0698 R0728 R0730 R0798 R0828 R0830 R0898 R0928 R0930 R0998 R1028 R1030 R1098
24	12	127-2265	SMT Res, 51.1, 1/16w, 1%, 0603	0603	R0123 R0223 R0323 R0423 R0523 R0623 R0723 R0823 R0923 R1 R1023 R1402
25	10	127-2400	SMT Res, 549K, 1/16w, 1%, 0603	0603	R0126 R0226 R0326 R0426 R0526 R0626 R0726 R0826 R0926 R1026
26	20	127-2420	SMT Res, 56.2K, 1/16w, 1%, 0603	0603	R0101 R0102 R0201 R0202 R0301 R0302 R0401 R0402 R0501 R0502 R0601 R0602 R0701 R0702 R0801 R0802 R0901 R0902 R1001 R1002
27	32	127-2490	SMT Res, 604, 1/16w, 1%, 0603	0603	R0103 R0104 R0133 R0203 R0204 R0233 R0303 R0304 R0333 R0403 R0404 R0433 R0503 R0504 R0533 R0603 R0604 R0633 R0703 R0704 R0733 R0803 R0804 R0833 R0903 R0904 R0933 R1003 R1004 R1033 R1340 R1341
28	20	152-0020	SMT Transistor, NPN, 2N3904	SOT-23	Q1501 Q1503 Q1511 Q1513 Q1521 Q1523 Q1531 Q1533 Q1541 Q1543 Q1551 Q1553 Q1561 Q1563 Q1571 Q1573 Q1581 Q1583 Q1591 Q1593
29	10	152-0030	SMT Transistor, PNP, 2N3906	SOT-23	Q1502 Q1512 Q1522 Q1532 Q1542 Q1552 Q1562 Q1572 Q1582 Q1592

Item	Qty	P/N	Title	Size	Reference(m)
30	20	180-0110	Relay, SMT, PhotoMOS, 25ohm	SOP	S011 S012 S021 S022 S031 S032 S041 S042 S051 S052 S061 S062 S071 S072 S081 S082 S091 S092 S101 S102
31	5	186-0050	SMT, Common Mode Choke, 100uH	.600 x .475 " (cube)	L0101 L0301 L0501 L0701 L0901
32	2	407-1060	Header, Screw Terminal, 20pin, 3.5mm Pitch	3.5mm Pitch	J402 J403
33	6	430-0010	SMT IC, MC33078, Low Noise Dual Op Amp	8pin SOIC	U0104 U0304 U0504 U0704 U0904 U1403
34	10	430-0090	SMT IC, ESD Protector, PACUSB200	QSOP-16	U0101 U0201 U0301 U0401 U0501 U0601 U0701 U0801 U0901 U1001
35	10	430-0110	SMT IC, Low Noise Inst Amp, TI INA163UA	SO-14	U0102 U0202 U0302 U0402 U0502 U0602 U0702 U0802 U0902 U1002
36	1	430-0120	SMT IC, AD8804ARU, DAC, 8-Bit, 12-Ch	TSSOP-20	U1505
37	10	430-0130	SMT IC, THAT4301S, Analog Engine	30-pin SOIC. .3" Wide	U0103 U0203 U0303 U0403 U0503 U0603 U0703 U0803 U0903 U1003
38	4	430-0140	SMT IC, DG485DN, Octal Analog Switch	20pin PLCC	U1301 U1302 U1303 U1304
39	4	430-0150	SMT IC, MC74HC595ADT, 8bit Shift Reg	TSSOP-16	U1501 U1502 U1503 U1504
40	2	430-0160	SMT IC, DG408, 8:1 Analog Mux	16pin Narrow SO	U1401 U1402
41	5	430-0170	SMT IC, MAX4602CAE, Quad Analog Sw	SSOP16	S0201 S0401 S0601 S0801 S1001
42	1	672-0435	Cable, Assembly, Ribbon, 16cond	Len 7"	J101
43	1	672-0440	Cable, Assembly, Ribbon, 20cond	Len 2"	J102
44	8	999-9998	OPTIONAL_PARTS - DO NOT LOAD -		R2 R3 R4 R5 U1601 U1602 U1603 U1604
45	54	999-9999	HOLES and FIDUCIALS - DO NOT LOAD		CDO1 CDO10 CDO2 CDO3 CDO4 CDO5 CDO6 CDO7 CDO8 CDO9 LVL1 LVL10 LVL2 LVL3 LVL4 LVL5 LVL6 LVL7 LVL8 LVL9 MT22 MT23 MT25 MT26 PRE01 PRE02 PRE03 PRE04 PRE05 PRE06 PRE07 PRE08 PRE09 PRE10 VCA1 VCA10 VCA2 VCA3 VCA4 VCA5 VCA6 VCA7 VCA8 VCA9 VCAO1 VCAO10 VCAO2 VCAO3 VCAO4 VCAO5 VCAO6 VCAO7 VCAO8 VCAO9

Ivie Technologies, Inc
1605 N West State Street, Lehi, Utah, 84043,
(801) 766-7600 Fax (801) 766-8282

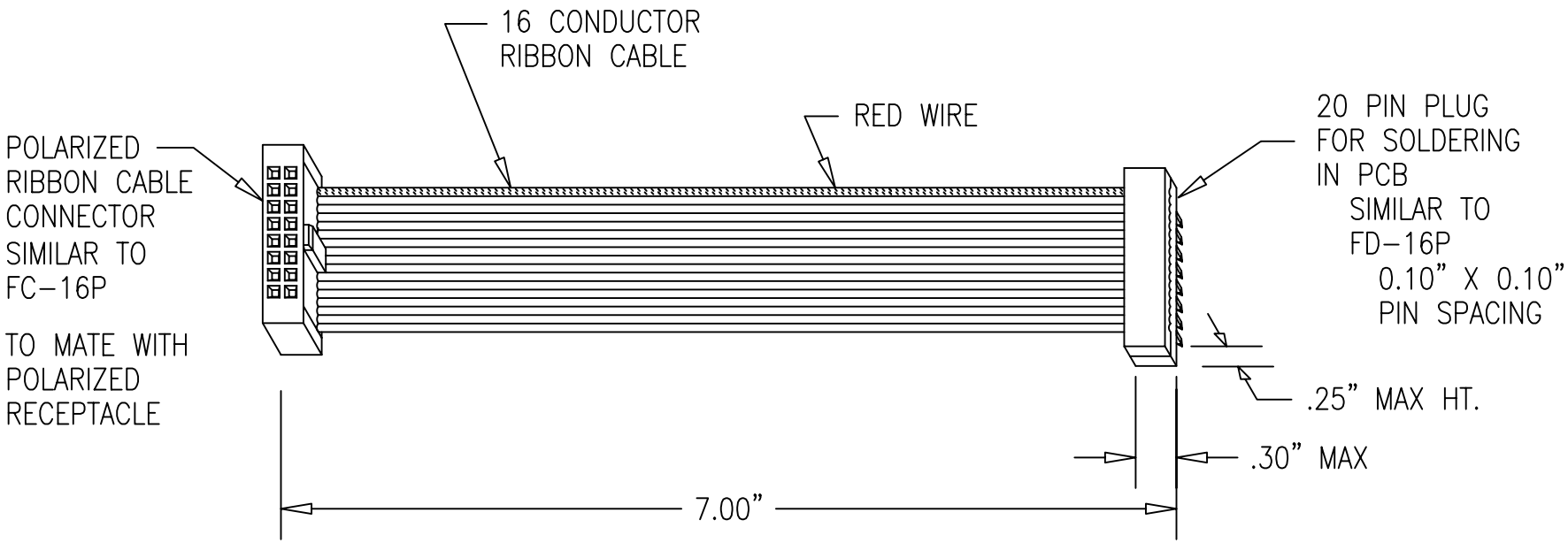

672-0435 REV B

Ivie Technologies,inc.

PROJECT: 1026		
TITLE: DAUGHTER TO MOTHER BOARD – CABLE		
SCALE: NONE	DATE: 10-24-02	
APPROVED BY:	DRAWN BY: GLB	
FILE: 1026	DRAWING # 672-0435	REV. B

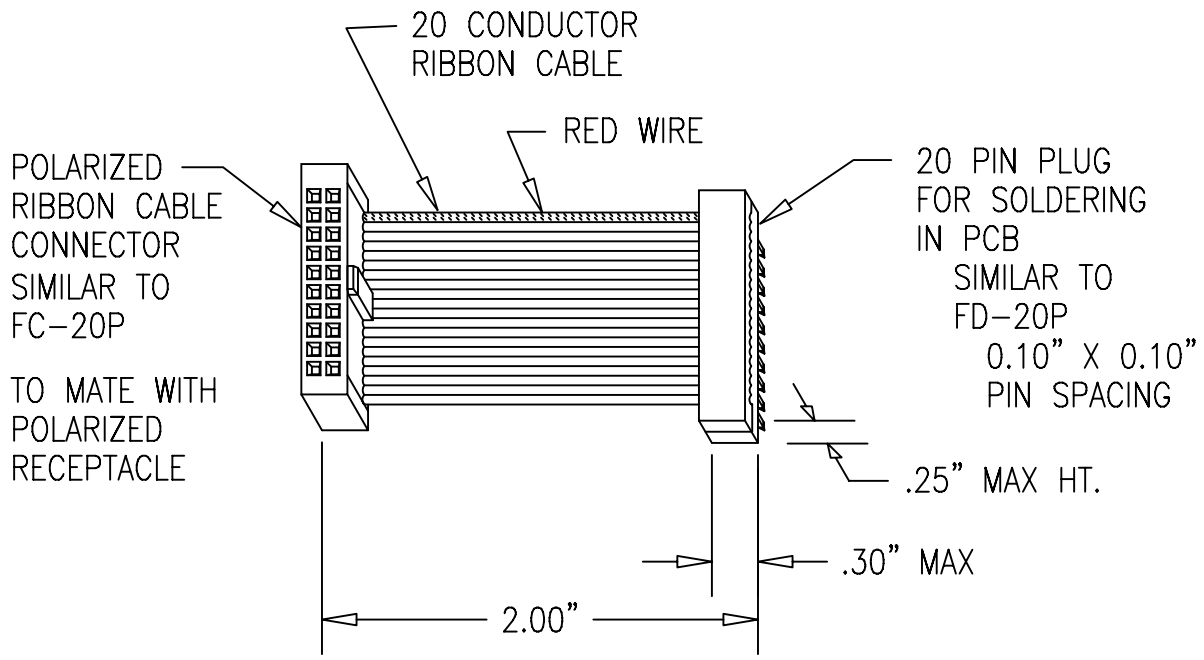

672-0440 REV B

Ivie Technologies,inc.

PROJECT: 1026		
TITLE: DAUGHTER TO MOTHER BOARD – CABLE		
SCALE: NONE	DATE: 10-24-02	
APPROVED BY:	DRAWN BY: GLB	
FILE: 1026	DRAWING # 672-0440	REV. B

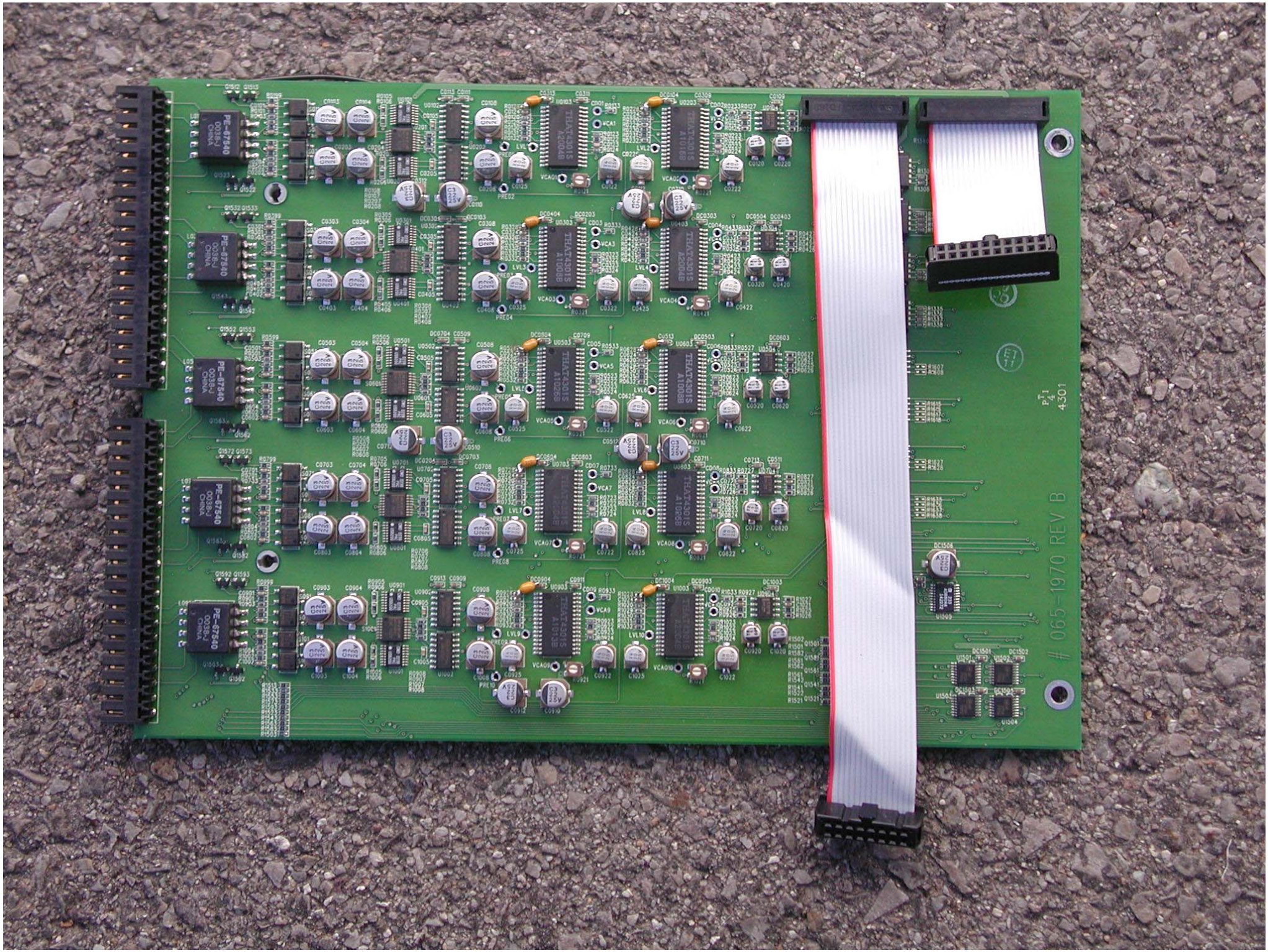

065-1970 REV B

Ivie Technologies

005-1940 Rev B
1026 Main Board
Schematic

October 2002

Ivie
Technologies Inc.

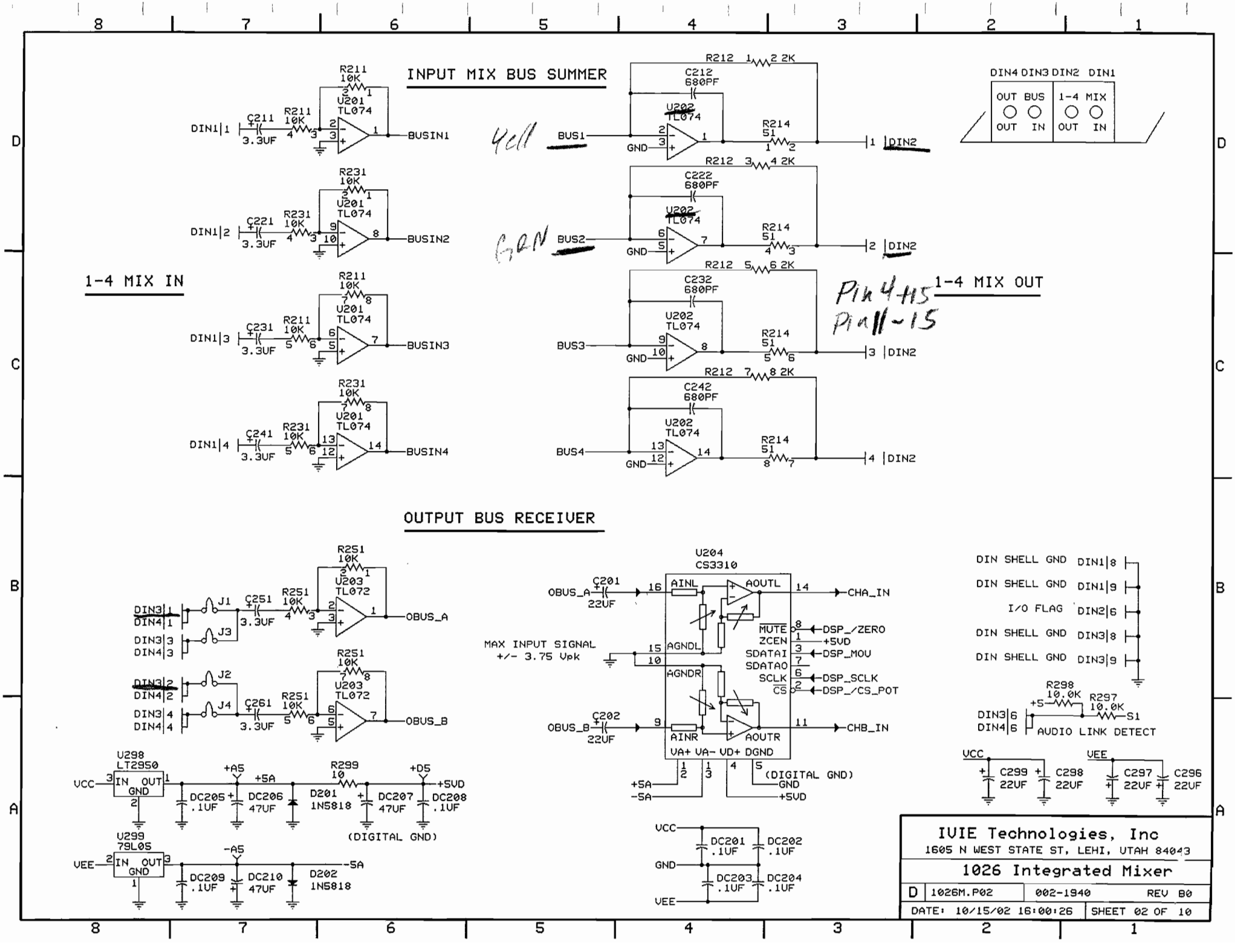
INPUT MIX BUS SUMMER
1-4 MIX IN
1-4 MIX OUT
OUTPUT BUS RECEIVER
DIN4 DIN3 DIN2 DIN1
OUT BUS
1-4 MIX
OUT IN
OUT IN
Yell
GRN
Pin 4-15
Pin 11-15
DIN1|1
DIN1|2
DIN1|3
DIN1|4
C211 3.3UF
C221 3.3UF
C231 3.3UF
C241 3.3UF
R211 10K
R231 10K
U201 TL074
BUSIN1
BUSIN2
BUSIN3
BUSIN4
BUS1
BUS2
BUS3
BUS4
GND
R212 2 2K
R212 4 2K
R212 6 2K
R212 8 2K
C212 680PF
C222 680PF
C232 680PF
C242 680PF
U202 TL074
R214 51
DIN2
DIN3|1
DIN4|1
DIN3|3
DIN4|3
DIN3|2
DIN4|2
DIN3|4
DIN4|4
J1
J2
J3
J4
C251 3.3UF
C261 3.3UF
R251 10K
U203 TL072
OBUS_A
OBUS_B
U204 CS3310
OBUS_A
OBUS_B
C201 22UF
C202 22UF
AINL
AOUTL
AGNDL
AGNDR
AINR
AOUTR
MUTE
ZCEN
SDATAI
SDATAO
SCLK
CS
VA+ VA- VD+ DGND
CHA_IN
CHB_IN
DSP_/ZERO
+5VD
DSP_MOV
DSP_SCLK
DSP_/CS_POT
MAX INPUT SIGNAL
+/- 3.75 Vpk
(DIGITAL GND)
GND
+5VD
+5A
-5A
DIN SHELL GND DIN1|8
DIN SHELL GND DIN1|9
I/O FLAG DIN2|6
DIN SHELL GND DIN3|8
DIN SHELL GND DIN3|9
R298 10.0K
R297 10.0K
+5
S1
DIN3|6
DIN4|6
AUDIO LINK DETECT
VCC
VEE
C299 22UF
C298 22UF
C297 22UF
C296 22UF
U298 LT2950
IN OUT GND
+A5
+5A
R299 10
+D5
+5VD
DC205 .1UF
DC206 47UF
D201 1N5818
DC207 47UF
DC208 .1UF
(DIGITAL GND)
U299 79L05
-A5
-5A
DC209 .1UF
DC210 47UF
D202 1N5818
DC201 .1UF
DC202 .1UF
DC203 .1UF
DC204 .1UF
IVIE Technologies, Inc
1605 N WEST STATE ST, LEHI, UTAH 84043
1026 Integrated Mixer
D 1026M.P02 002-1940 REV B0
DATE: 10/15/02 16:00:26 SHEET 02 OF 10

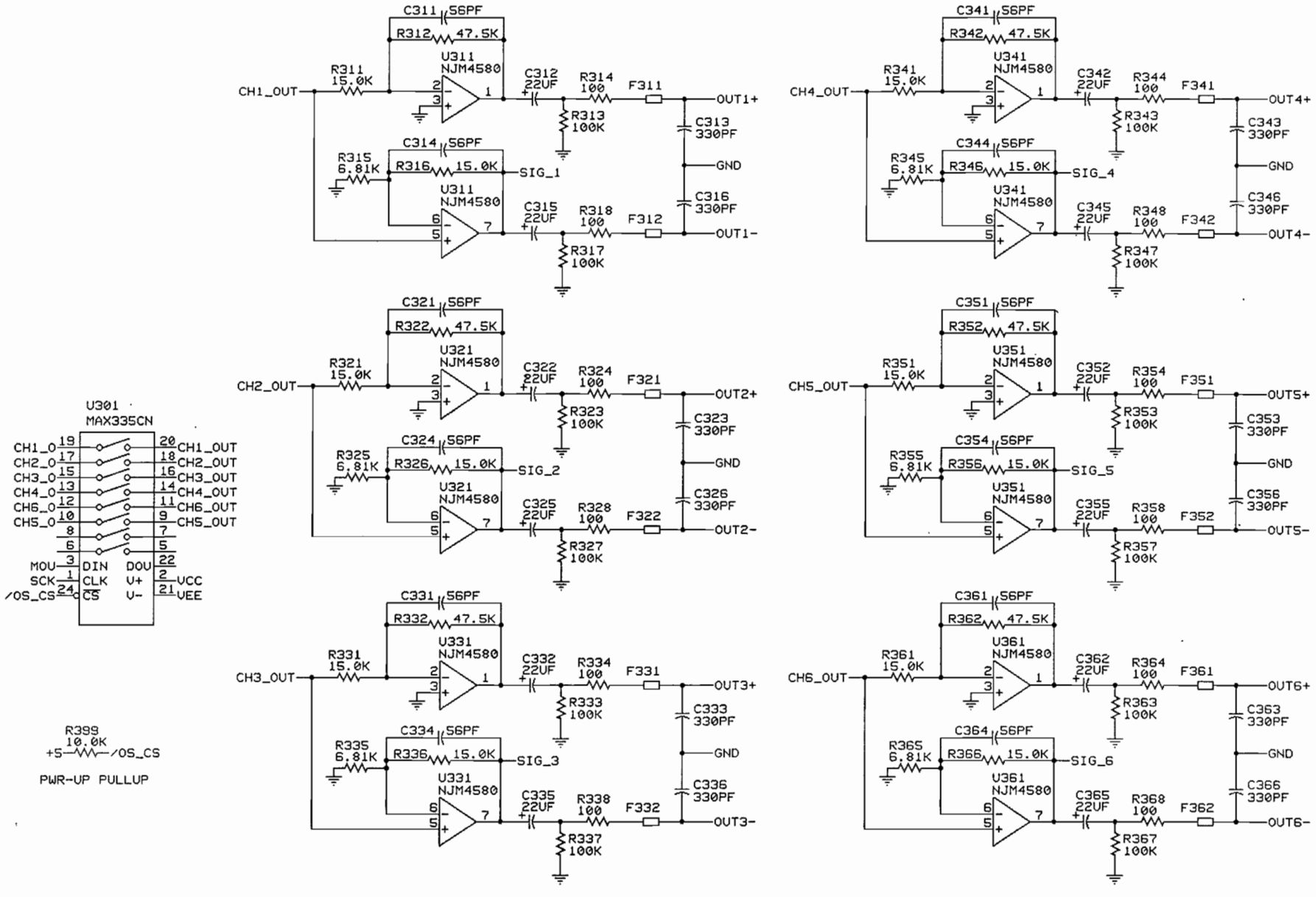

CHANNELS 1-6 BALANCED OUTPUT DRIVERS

IVIE Technologies, Inc. 1605 N WEST STATE ST, LEHI, UTAH, 84043			
1026 Integrated Mixer			
D	1026M.P03	002-1940	REV B0
DATE: 10/15/02 16:00:27		SHEET 03 OF 10	

REMOTE CONTROL MUX

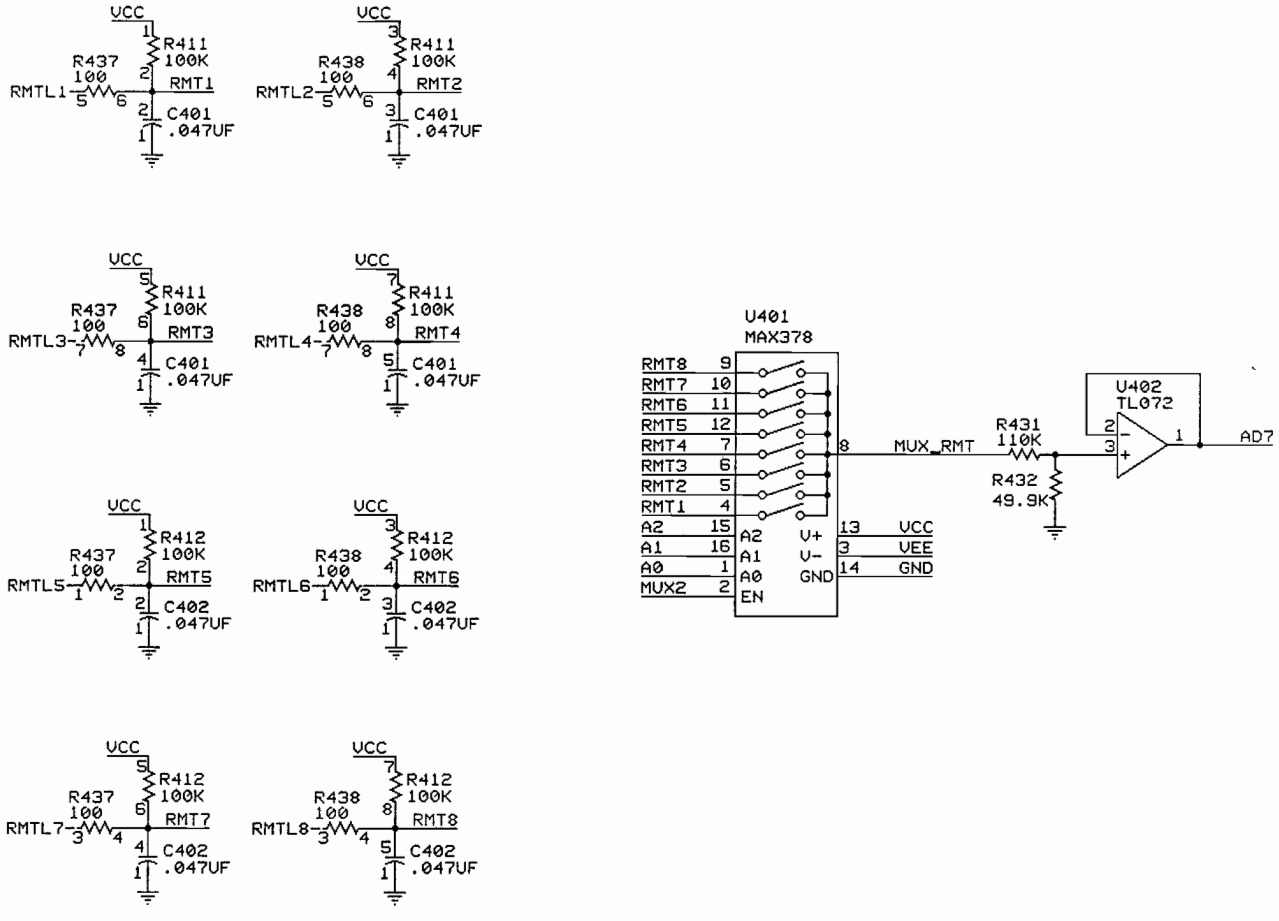

Remote Control Levels (muxed)

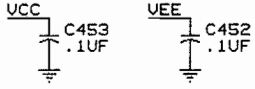

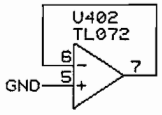

IVIE Technologies, Inc. 1605 N WEST STATE ST, LEHI, UTAH 84043			
1026 Integrated Mixer			
D	1026M.P04	002-1940	REV B0
DATE: 10/15/02 16:00:28		SHEET 04 OF 10	

PRESET INPUT

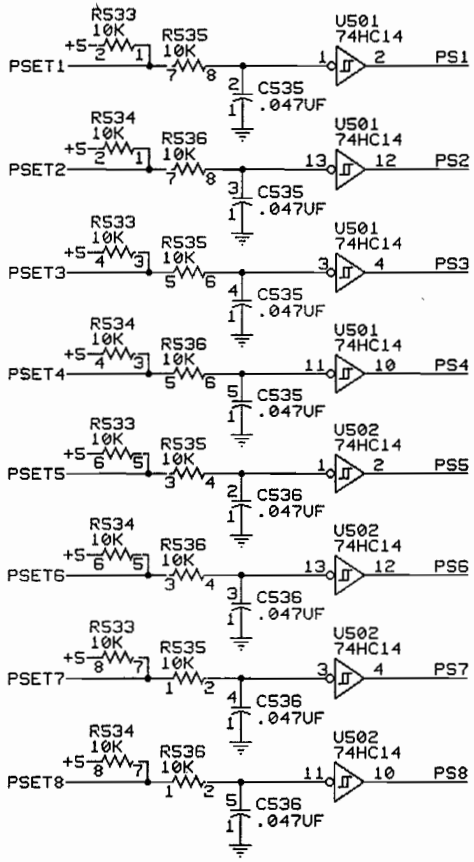

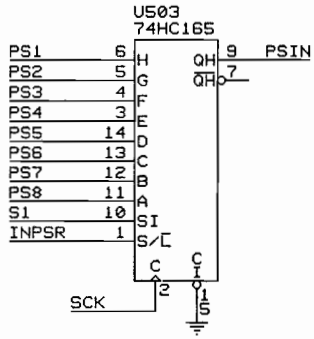

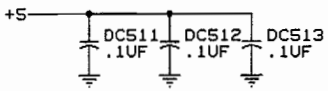

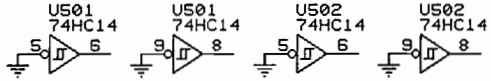

IVIE Technologies, Inc.
1605 N WEST STATE ST, LEHI, UTAH 84043

1026 Integrated Mixer

D	1026M.P05	002-1940	REV B0
DATE: 10/15/02 16:00:29		SHEET 05 OF 10	

INTERPROCESSOR COMMO

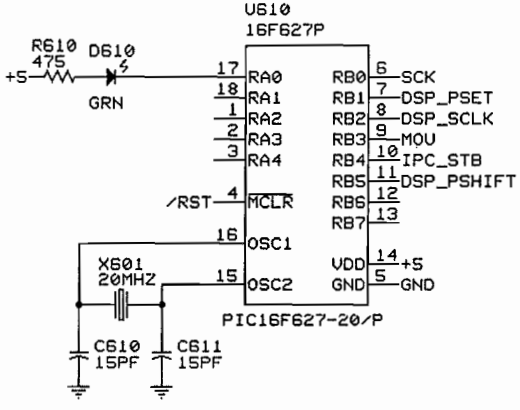

OLD 2557

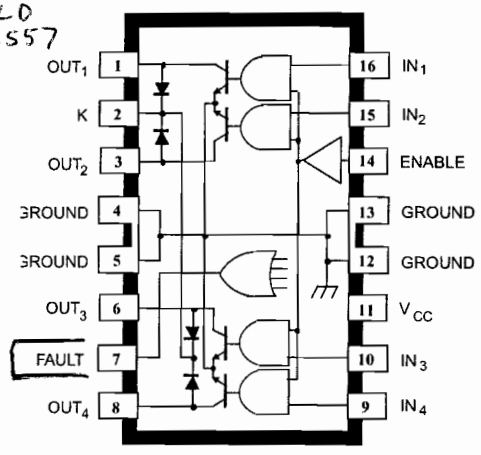

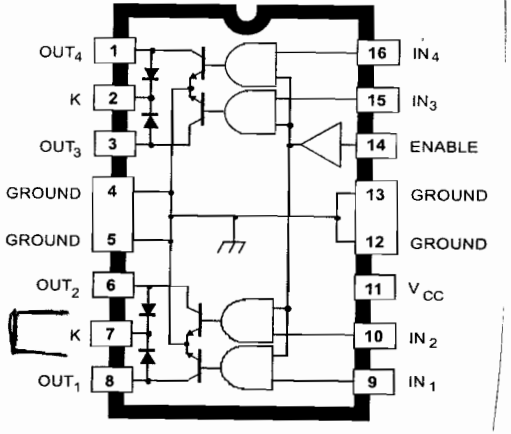

New 2559

FUNCTON OUTPUT

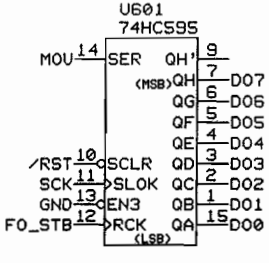

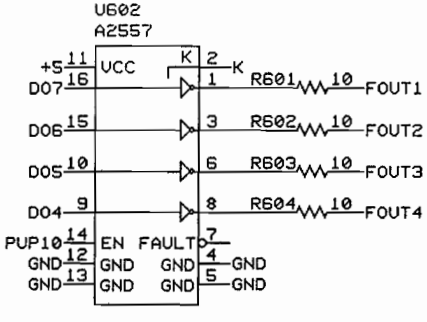

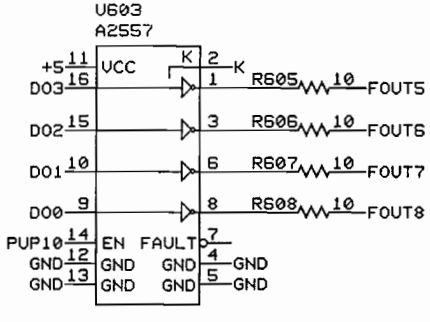

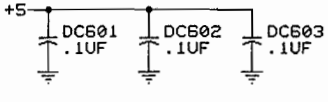

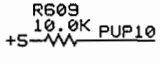

IVIE Technologies, Inc 1605 N WEST STATE ST, LEHI, UTAH 84043	
1026 Integrated Mixer	
D 1026M.P06	001-1920 REV A0
DATE: 10/15/02 16:31:28	SHEET 06 OF 10

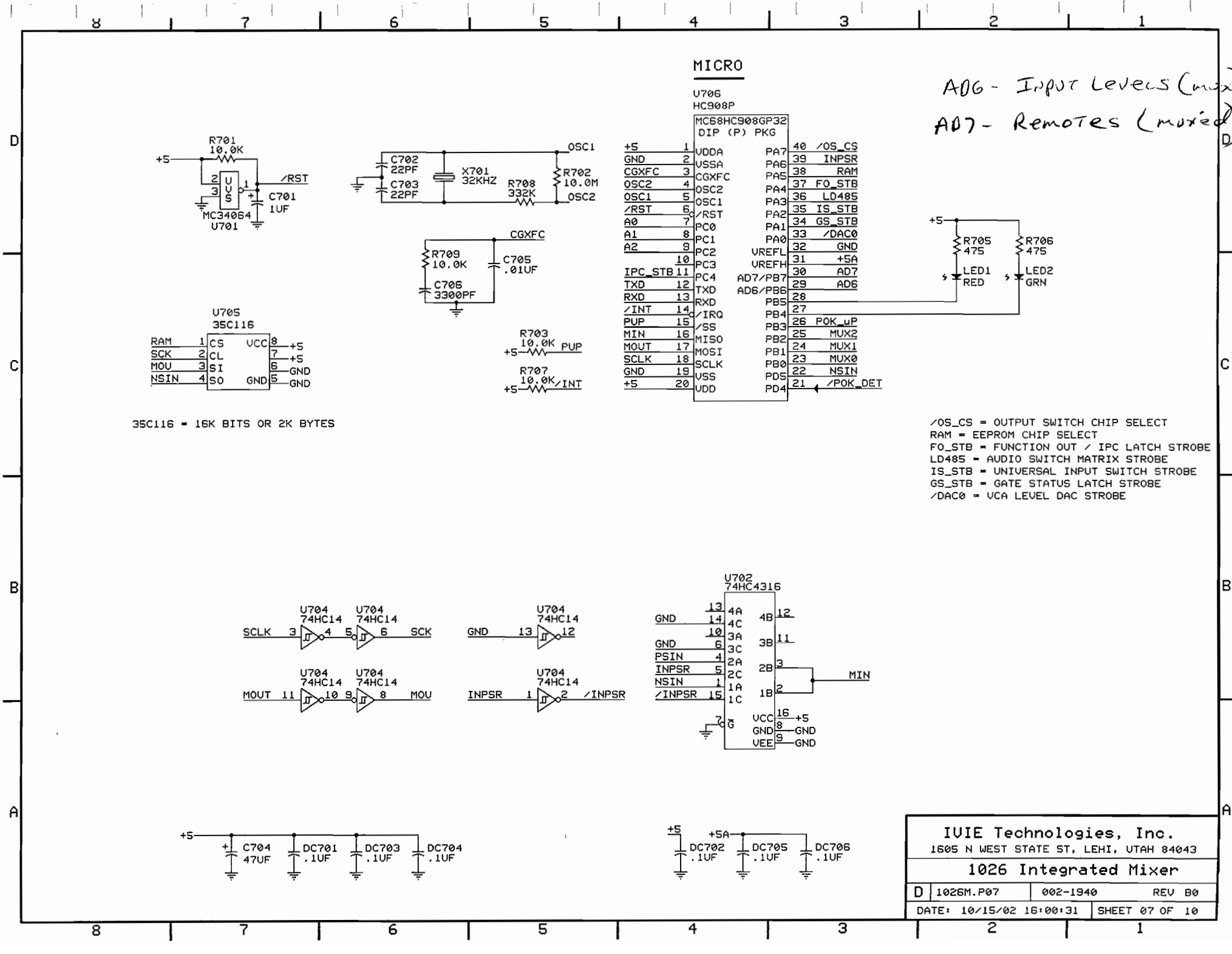
MICRO
U706
HC908P
MC68HC908GP32
DIP (P) PKG
AD6 - Input Levels (mux)
AD7 - Remotes (mux)
R701
10.0K
+5
/RST
C701
1UF
MC34064
U701
C702
22PF
C703
22PF
X701
32KHZ
R708
332K
R702
10.0M
OSC1
OSC2
R709
10.0K
C706
3300PF
C705
.01UF
CGXFC
U705
35C116
RAM
SCK
MOU
NSIN
CS
CL
SI
SO
VCC
GND
R703
10.0K
PUP
R707
10.0K
/INT
+5
GND
CGXFC
OSC2
OSC1
/RST
A0
A1
A2
IPC_STB
TXD
RXD
/INT
PUP
MIN
MOUT
SCLK
GND
+5
VDDA
VSSA
CGXFC
OSC2
OSC1
/RST
PC0
PC1
PC2
PC3
PC4
TXD
RXD
/IRQ
/SS
MISO
MOSI
SCLK
VSS
VDD
PA7
PA6
PA5
PA4
PA3
PA2
PA1
PA0
VREFL
VREFH
AD7/PB7
AD6/PB6
PB5
PB4
PB3
PB2
PB1
PB0
PD5
PD4
/OS_CS
INPSR
RAM
FO_STB
LD485
IS_STB
GS_STB
/DAC0
GND
+5A
AD7
AD6
POK_uP
MUX2
MUX1
MUX0
NSIN
/POK_DET
R705
475
R706
475
LED1
RED
LED2
GRN
35C116 = 16K BITS OR 2K BYTES
/OS_CS = OUTPUT SWITCH CHIP SELECT
RAM = EEPROM CHIP SELECT
FO_STB = FUNCTION OUT / IPC LATCH STROBE
LD485 = AUDIO SWITCH MATRIX STROBE
IS_STB = UNIVERSAL INPUT SWITCH STROBE
GS_STB = GATE STATUS LATCH STROBE
/DAC0 = VCA LEVEL DAC STROBE
U704
74HC14
SCLK
SCK
MOUT
MOU
GND
INPSR
/INPSR
U702
74HC4316
PSIN
NSIN
/INPSR
MIN
VCC
VEE
C704
47UF
DC701
.1UF
DC703
.1UF
DC704
.1UF
DC702
.1UF
DC705
.1UF
DC706
.1UF
IVIE Technologies, Inc.
1605 N WEST STATE ST, LEHI, UTAH 84043
1026 Integrated Mixer
D
1026M.P07
002-1940
REV B0
DATE: 10/15/02 16:00:31
SHEET 07 OF 10

OUTPUT SIGNAL PRESENCE

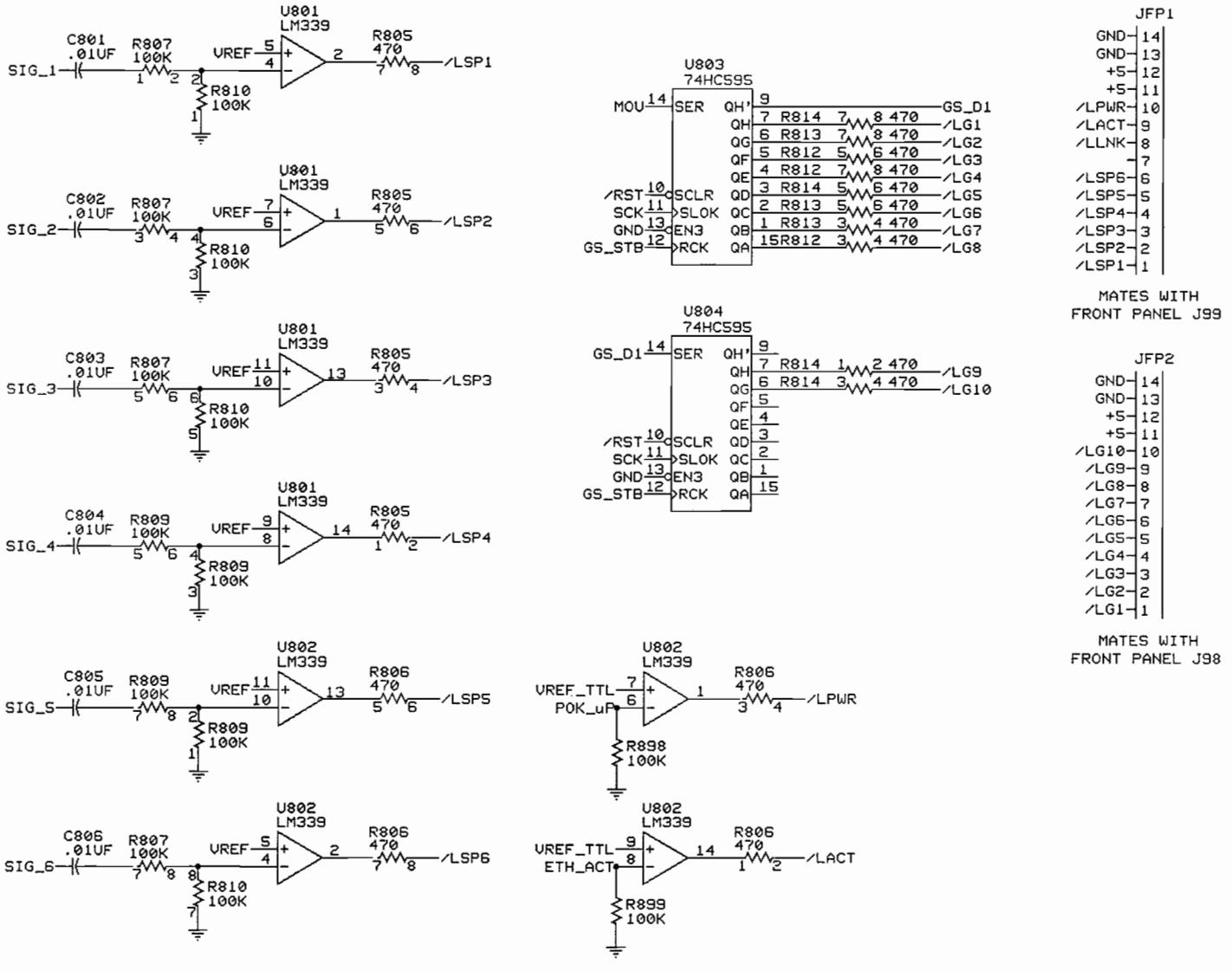

IVIE Technologies, Inc. 1605 NW STATE ST., LEHI, UTAH 84043			
1026 Integrated Mixer			
D	1026M.P08	002-1940	REV B0
DATE: 10/15/02 16:00:32		SHEET 08 OF 10	

NOTE:
- SUB. AS2815AU-3.3(ALPHA SEMI.) FOR LT1085.

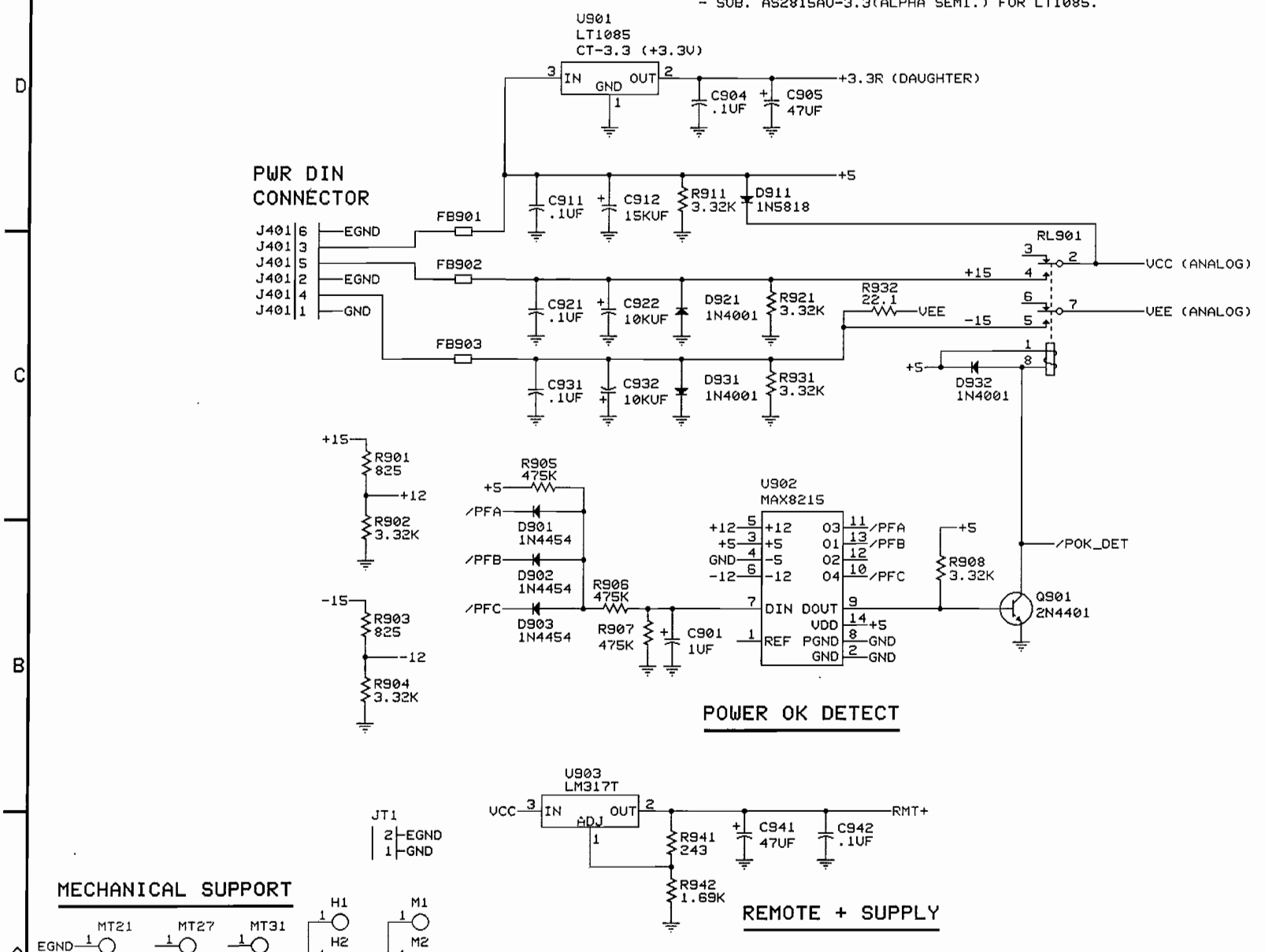

IVIE Technologies, Inc.	
1605 NW STATE STREET, LEHI, UTAH 84043	
1026 Integrated Mixer	
D 1026M.P09	002-1940 REV B0
DATE: 10/15/02 16:00:33	SHEET 09 OF 10

MAIN TO 626 DAUGHTER HEADERS

AUDIO/PWR

J201

VCC	1	2	VCC
VEE	3	4	VEE
CH6_O	5	6	GND
GND	7	8	CH5_O
CH4_O	9	10	GND
GND	11	12	CH3_O
CH2_O	13	14	GND
GND	15	16	CH1_O
CHA_IN	17	18	GND
GND	19	20	CHB_IN

CONTROL/PWR

J202

+5	1	2	+5
GND	3	4	GND
+3.3R	5	6	+3.3R
GND	7	8	GND
(DSP_/RST)	9	10	DSP_MOU
DSP_/CS_POT	11	12	(DSP_MIN)
DSP_PSET	13	14	DSP_SCLK
DSP_PSHIFT	15	16	(DSP_CLIP_A)
DSP_TX0	17	18	(DSP_CLIP_B)
DSP_RX0	19	20	(DSP_RLY_CTL)
	21	22	(DSP_ACK_LED)
DSP_/ZERO	23	24	/POK_DET
GND	25	26	GND

OUTPUT CONNECTORS

J402

24	GND
23	OUT6-
22	OUT6+
21	GND
20	OUT5-
19	OUT5+
18	GND
17	OUT4-
16	OUT4+
15	GND
14	OUT3-
13	OUT3+
12	GND
11	OUT2-
10	OUT2+
9	GND
8	OUT1-
7	OUT1+
6	RMTL4
5	RMTL3
4	RMTL2
3	RMTL1
2	GND
1	RMT+

J402

48	FOUT8
47	FOUT7
46	FOUT6
45	FOUT5
44	FOUT4
43	FOUT3
42	FOUT2
41	FOUT1
40	GND
39	GND
38	PSET8
37	PSET7
36	PSET6
35	PSET5
34	PSET4
33	PSET3
32	PSET2
31	PSET1
30	RMTL8
29	RMTL7
28	RMTL6
27	RMTL5
26	GND
25	RMT+

MAIN TO UNIVERSAL INPUT HEADERS

J101

BUSIN1	1	2	GND
BUSIN2	3	4	GND
BUSIN3	5	6	GND
BUSIN4	7	8	GND
BUS1	9	10	GND
BUS2	11	12	GND
BUS3	13	14	GND
BUS4	15	16	GND

J102

SCK	1	2	MUX0
MOU	3	4	MUX1
A0	5	6	/DAC0
A1	7	8	LD485
A2	9	10	IS_STB
/RST	11	12	+5A
VCC	13	14	VCC
+5	15	16	+5
VEE	17	18	VEE
GND	19	20	AD6

MUX OUT FROM INPUT BOARD (LEVEL DETECTORS)

MAIN TO ETHERNET INTERFACE HEADERS

J502

	1	2	
	3	4	
	5	6	
	7	8	
GND	9	10	
	11	12	
	13	14	
	15	16	
	17	18	
	19	20	
	21	22	
	23	24	
	25	26	GND
+5	27	28	(VBAT)
(VRAM)	29	30	
	31	32	
	33	34	
	35	36	
	37	38	
GND	39	40	+5

J501

+5	1	2	GND
	3	4	
	5	6	
	7	8	
	9	10	
	11	12	
	13	14	
	15	16	
	17	18	
	19	20	
	21	22	
	23	24	
RXD (TXD)	25	26	(RXD) TXD
DSP_RX0 (TXC)	27	28	(RXC) DSP_TX0
(TXB)	29	30	(RXB)
(TXA)	31	32	(RXA)
(PD0)	33	34	(PD1)
(PD2)	35	36	(PD3)
(PD4)	37	38	(PD5)
(PD6)	39	40	(PD7)

J503 R1001 475

ETH_ACT	1	2	/LLNK
	3	4	
	5	6	
	7	8	

IVIE Technologies, Inc. 1605 NW STATE STREET, LEHI, UTAH 84043			
1026 Integrated Mixer			
D	1026M.P10	002-1940	REV B0
DATE: 10/15/02 16:00:34		SHEET 10 OF 10	

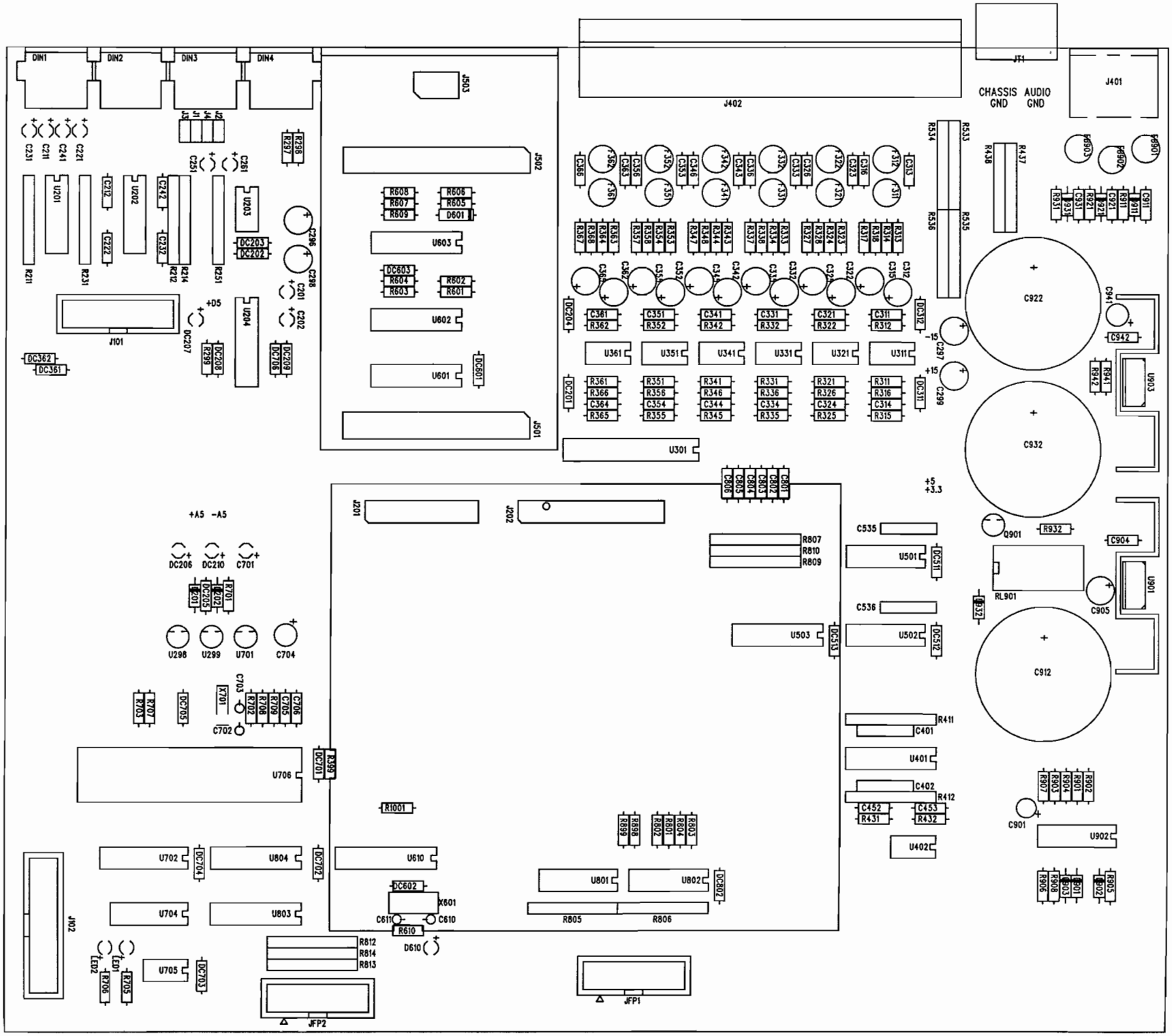

Pcgerber II V 6.0 : Wed Oct 02 15:33:10 2002 - 1026m.pcb : SST0126.PHO

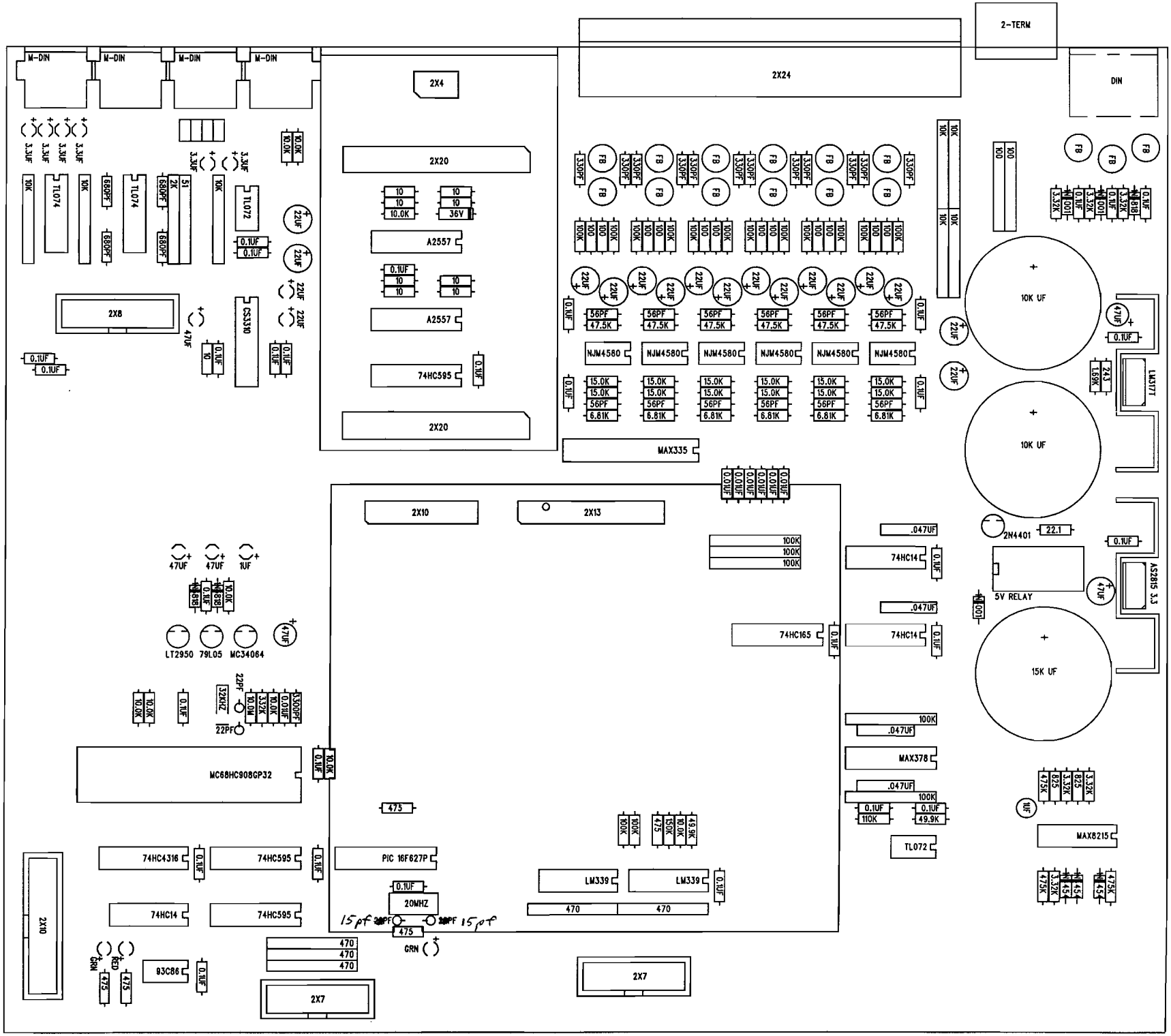
M-DIN
M-DIN
M-DIN
M-DIN
2X4
2X24
2-TERM
DIN
2X20
A2557
A2557
74HC595
2X20
2X8
CS3310
TL074
TL074
TL072
NJM4580
MAX335
10K UF
10K UF
15K UF
LM317T
2N4401
5V RELAY
AS2815 3.3
74HC14
74HC165
74HC14
MAX378
TL072
MAX8215
LT2950
79L05
MC34064
MC68HC908GP32
PIC 16F627P
LM339
LM339
74HC4316
74HC595
74HC595
74HC14
74HC595
93C86
2X10
2X7
2X7
2X10
2X13
20MHZ
32KHZ
15pf
15pf

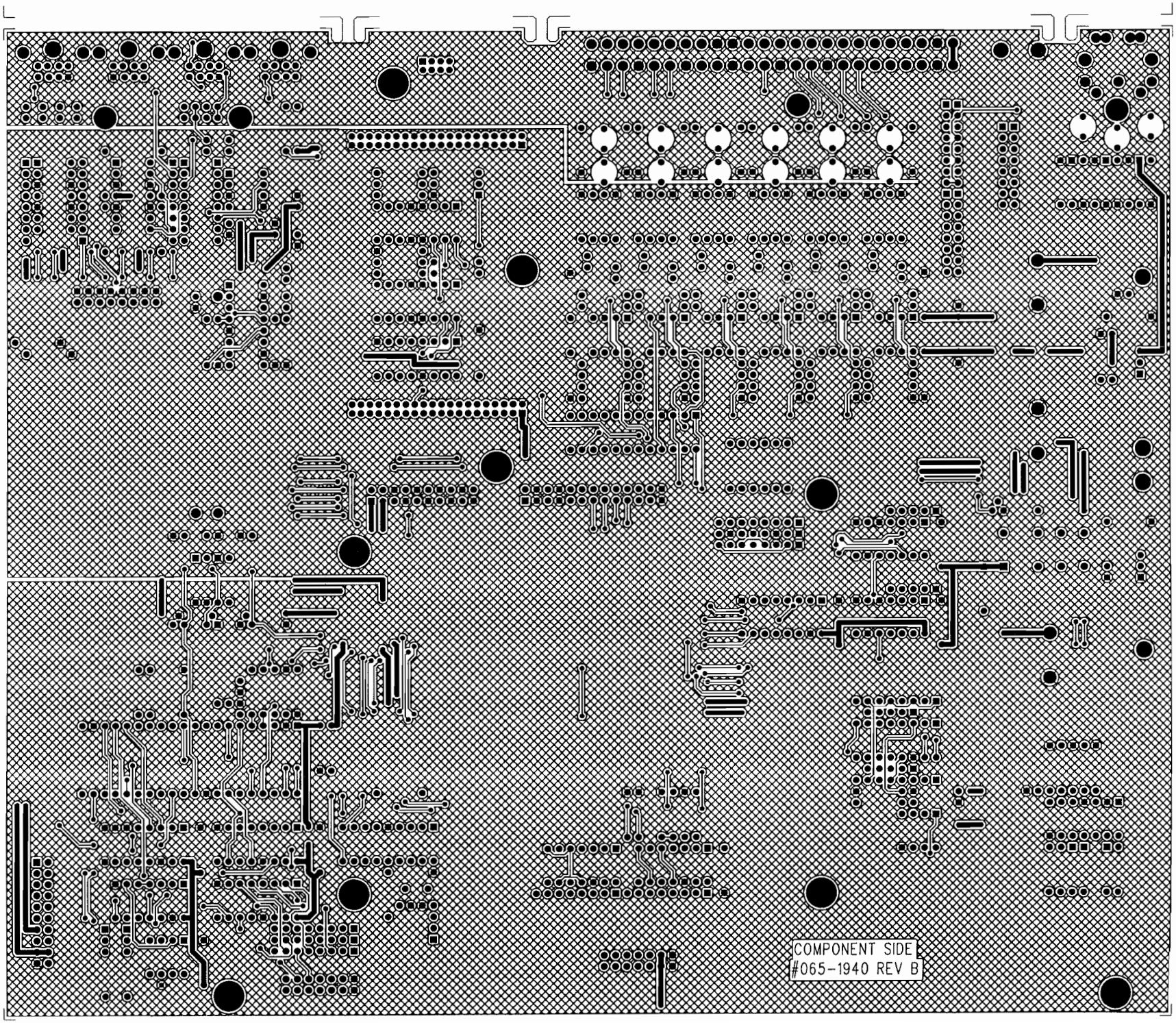

Pcgerber II V 6.0 : Wed Oct 02 15:33:08 2002 - 1026m.pcb : ART01.PHO

Pcgerber II V 6.0 : Wed Oct 02 15:33:09 2002 - 1026m.pcb : ART02.PHO

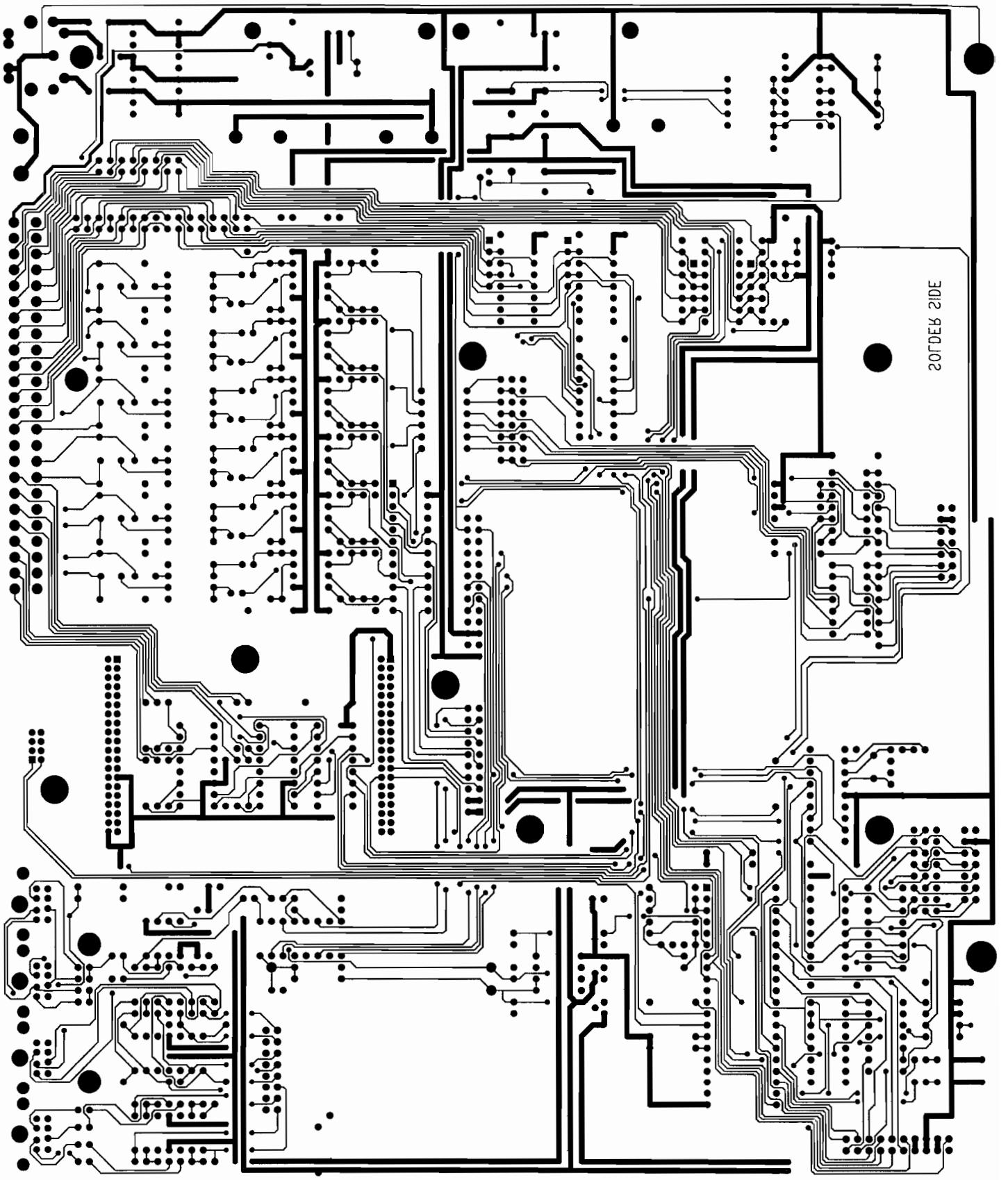

Ivie Technologies

End of Document

06/14/2004

Ivie
Technologies Inc.